# Electric Pump with Solenoid Valve

**MODELS: PE30W3L01A, PE30W3L02A, PE40W3L02A, PE40W3L05A PE50W3L03A, PE50W3L05A, PE30W4L01A, PE30W4L02A, PE40W4L02A, PE50W4L03A, PE50W4L05A, PW33L, PW43L**

SFA Companies 10939 N. Pomona Ave. Kansas City, MO 64153
Tel: 888-332-6419 * Fax: 816-448-2142
E-mail: sales@bvahydraulics.com Website: www.bvahydraulics.com

This is the safety alert symbol. It is used to alert you to potential personal injury hazards. Obey all safety messages that follow this symbol to avoid possible injury or death.

## Maximum Operating Pressure 10,000 PSI

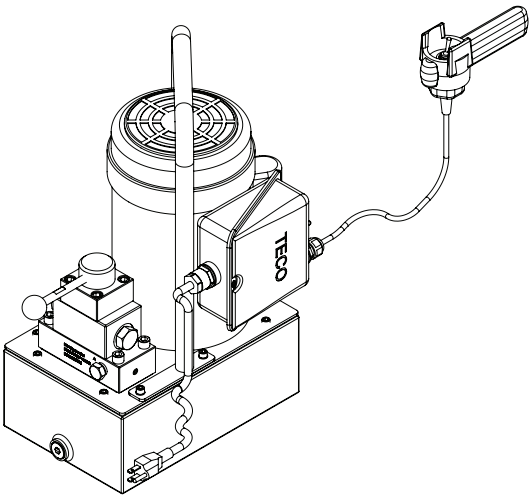


PE30W3L01A

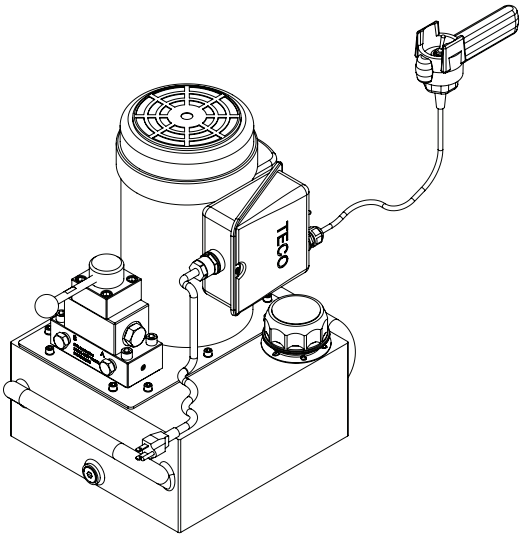


PE40W4L02A

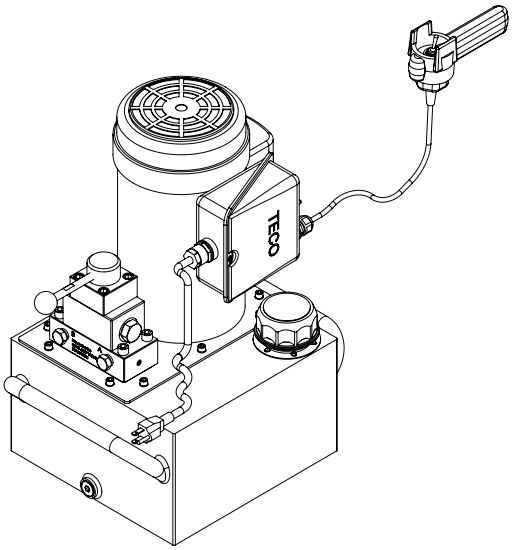


PE50W4L03A

**Save these instructions.** For your safety, read and understand the information contained within. The owner and operator shall have an understanding of this product and safe operating procedures before attempting to use this product. Instructions and safety information shall be conveyed in operator's native language before use of this product is authorized. Make certain that the operator thoroughly understands the inherent dangers associated with the use and misuse of the product. If any doubt exists as to the safe and proper use of this product as outlined in this factory authorized manual, remove from service immediately.

**Inspect before each use.** It is recommended that, prior to each use, an inspection be done by qualified personnel and that any missing or damaged parts, decals, warning / safety labels or signs be replaced with factory authorized replacement parts only. Any pump that appears to be damaged in any way, is worn, leaking or operates abnormally shall be removed from service immediately until such time as repairs can be made. Any pump that has been subjected to a shock load (a load dropped suddenly, causing the system pressure to exceed 10,000 PSI), shall be removed from service immediately until checked by qualified personnel. Owners and operators of this equipment shall be aware that the use and subsequent repair of this equipment does require special training and knowledge.

## PRODUCT DESCRIPTION

This Pump is engineered to meet most industrial standards for Performance and Safety. Its allows quick displacement of hydraulic fluid under no load conditions and easy pumping in loaded conditions. This electric hydraulic pump supplies compressed hydraulic fluid to compatible applications i.e. rams, presses, spreaders, compactors and crimping machines, anywhere that 10,000 PSI of fluid pressure is needed. Special skill, knowledge and training may be required for a specific task and the product may not be suitable for all the jobs described above. Unsuitable applications would include applications that call for a device to move, level or support persons, animals, hazardous materials, mobile homes/ dwellings in general, mirrors and/or plate glass, and/or to connect/secure hatches, components, etc. between bulkheads. The user must make the decision regarding suitability of the product for any given task and assume the responsibility of safety for himself/herself and others in the work area.

## ⚠ DANGER

**TO AVOID ELECTROCUTION HAZARD:**

- Owner, Operator must **read, understand and follow** all printed material provided with this device **before use**.
- Connect **ONLY** to properly **grounded** electrical source. Connect to **GFI** outlet **ONLY!** For use in **dry locations**.
- Avoid the use of extension cords. If necessary, for extension cords lengths up to 25 ft, use SJT-14X3 or heavier. For cords up to 50 ft, use SJT-12X3 or heavier. For extension cord lengths up to 100 ft, use SJT-10X3 or heavier **NEVER** use a 3 prong adapter.
- Do not operate this device in an explosive atmosphere or in the presence of conductive liquids.

## SPECIFICATIONS

| Model Number (for use w/ single acting cylinder) | Usable Oil Capacity (gal) | Pressure Rating (psi) | | Output Flow Rate ($in^3$/min) | | Valve Type | Valve Function | Motor (HP) | Motor Voltage (V) | Weight (lbs) |
|---|---|---|---|---|---|---|---|---|---|---|
| | | 1st Stage | 2nd Stage | 1st Stage | 2nd Stage | | | | | |
| PE30W3L01A | 1 | 350 | 10,000 | 293 | 18 | 3-way, 3-position | Advance/ Hold/ Run | 0.5 | 120 | 61.5 |
| PE30W3L02A | 2 | | | | | | | | | 65.3 |
| PE40W3L02A | | 700 | | 311 | 37 | | | 1.0 | | 72.6 |
| PE50W3L03A | 3 | | | 470 | 61 | | | 1.5 | | 90.4 |
| PE50W3L05A | 5 | | | | | | | | | 98.0 |
| PE40W3L05A | | | | 311 | 37 | | | 1.0 | | 96.0 |
| PE30W4L01A | 1 | 350 | | 293 | 18 | 4-way, 3-position | | 0.5 | | 61.5 |
| PE30W4L02A | 2 | | | | | | | | | 65.3 |
| PE40W4L02A | | 700 | | 311 | 37 | | | 1.0 | | 72.6 |
| PE50W4L03A | 3 | | | 470 | 61 | | | 1.5 | | 90.4 |
| PE50W4L05A | 5 | | | | | | | | | 98.0 |

This is the safety alert symbol. It is used to alert you to potential personal injury hazards. Obey all safety messages that follow this symbol to avoid possible injury or death.

# WARNING

- **Read, understand, and follow all** instructions provided with and on this device **before use**.
- All WARNING statements must be carefully observed to help prevent personal injury.
- No alteration shall be made to this device.
- Always wear protective gear when operating hydraulic equipment. Tie up long hair, wear eye and ear protection, and non slip foot wear.
- Keep hydraulic equipment away from flames and heat. Hydraulic fluid can ignite and burn. Do not operate if leaks are detected.
- **Crush Hazard.** Keep hands and feet away from loading area. Avoid pinch points or crush points that can be created by the load, cylinder, or system components.
- To avoid crushing and related injuries: NEVER work on, under or around a lifted load before it is supported by appropriate mechanical means. Never rely on hydraulic pressure alone to support load.

**HYDRAULIC PUMPS**

- The user must be a qualified operator familiar with the correct operation, maintenance, and use of pumps. Lack of knowledge in any of these areas can lead to personal injury.
- Do not exceed rated capacity of the pump or any equipment in the system.
- Never attempt to lift a load weighing more than the capacity of the output device (cylinder, spreader etc.)
- Do not subject pump and its components to shock loads.
- Burst hazard exists if hose or connection pressure exceeds rated pressure.
- Inspect pump, cylinder, hoses and connections before each use to prevent unsafe conditions from developing. Do not use if they are damaged, altered or in poor condition. Do not operate the system with bent or damaged coupler or damaged threads.
- Never hold or stand directly in line with any hydraulic connections while pressurizing.
- **ALWAYS** use gauge or other load measuring instrument to verify load.
- **Never** attempt to disconnect hydraulic connections under pressure. Release all line pressure **before** disconnecting hoses.
- Use of incorrect power source will damage the motor.
- Do not use an ungrounded (two-prong) extension cord.
- Do not install, remove or rewire the motor with power applied. Have qualified technician to install, adjust and service the motor.
- Do not operate this device in an extreme temperature, explosive atmosphere or in the presence of conductive liquids.
- Always inspect hoses and connections for damage prior to use.
- Ensure the device is placed on a hard, level surface.
- Ensure that application is stable to work on and around.
- Use only approved accessories and approved hydraulic fluid.
- Never attach ANY component not authorized by manufacturer.
- Do not connect to application which can return more oil to the reservoir than the pump reservoir can hold.
- Do not connect pump to hydraulic system powered by another pump.
- This device is not suitable for use as support device! As the system load is lifted, use blocking and cribbing to guard against a falling load.
- All personnel must be clear before lowering load or depressurizing the system.
- Never try to disassemble a hydraulic pump, refer repairs to qualified, authorized personnel.

**HYDRAULIC HOSES & FLUID TRANSMISSION LINES**

- Avoid short runs of straight line tubing. Straight line runs do not provide for expansion and contraction due to pressure and/or temperature changes.
- Reduce stress in tube lines. Long tubing runs should be supported by brackets or clips. Before operating the pump, tighten all hose connections with proper tools. Do not overtighten. Connections should only be tightened securely and leak-free. Overtightening can cause premature thread failure or high pressure fittings to burst.
- Should a hydraulic hose ever rupture, burst or need to be disconnected, immediately shut off the pump and release all pressure. Never attempt to grasp a leaking pressurized hose with your hands. The force of escaping hydraulic fluid can inflict injury.
- Do not subject the hose to potential hazard such as fire, sharp objects, extreme heat or cold, or heavy impact.
- Do not allow the hose to kink, twist, curl, crush, cut or bend so tightly that the fluid flow within the hose is blocked or reduced. Periodically inspect the hose for wear.
- Do not pull, position or move setup by the hose.
- Hose material and coupler seals must be compatible with hydraulic fluid used. Hoses also must not come in contact with corrosive materials such as battery acid, creosote-impregnated objects and wet paint. Never paint a coupler or hose.
- FAILURE TO HEED THESE WARNINGS MAY RESULT IN PERSONAL INJURY AS WELL AS PROPERTY DAMAGE.

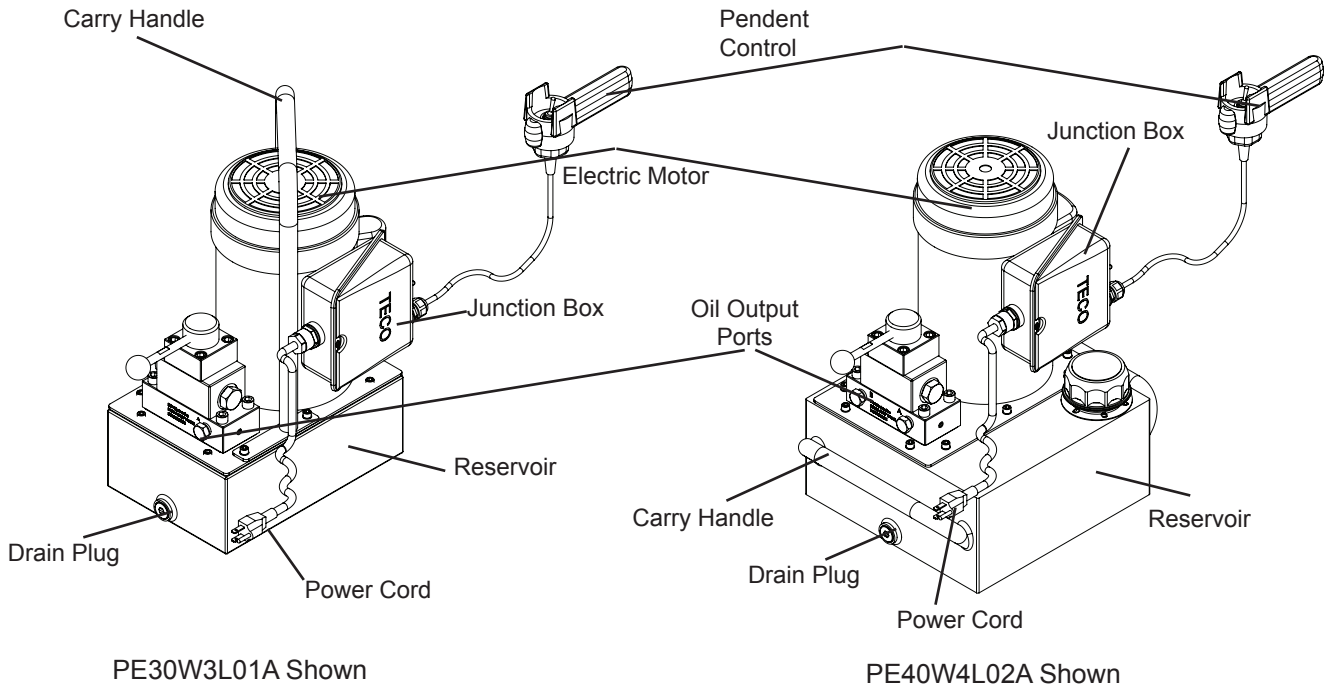


Fig. 1- Electric Pump w/ Attachable Mannual Control Valve With Locking Feature

## BEFORE USE

Read all instructions carefully before attempting to assemble or operate this pump. Most malfunctions in new equipment are the result of improper operation and/or improper set-up assembly.

Visually inspect all components for shipping damage. Do not use if any damage is found.

**Note:** E-Pump is shipped without hydraulic oil filled. Add oil before starting motor and operation.

Familiarize yourself with the specification and illustrations in this owner manual. Use service parts drawing as reference of location and assembly.

1. Compare motor nameplate against power availability to prevent motor burnout or dangerous electrical overloading.
2. The motor is wired for 120 volts unless otherwise specified, and are supplied with a plug and 3 prong cordset.

**Hydraulic Connections:**

1. Make sure to use the hydraulic oil specified by the manufacturer. Check and make sure the oil level in reservoir is at about 2” from top of reservoir plate, with cylinders retracted and motor off.
2. There are two oil output ports on this pump. CONNECT HYDRAULIC CONNECTION TO ONE OIL PORT ONLY. Connect to either one of the oil ouput ports and make sure the other port is plugged and tighten properly.
3. Use of pressure gauge is strongly recommended. Attach a pressure gauge between the pump and cylinder to monitor pressure on cylinder.
4. Make sure coupler, hose, valve, gauge are tightened securely to prevent accidental removal of components while in use. Hoses **must** not be kinked or twisted.

**Electrical Connections**:

⚠ *Motor, connections and remote Pendent switch are energized components containing line voltage!*

***Ensure supply is grounded and GFI protected!***

**Note:** Always secure threaded port connections with non-hardening pipe thread compound. Take care not to introduce compound into port orifices.

5. Do not exceed the rated capacity of the equipment connected to the pump. Use larger capacity cylinders if necessary. To **reduce** system component stress, material fatigue, and the risk of personal injury and property damage, **never** load a hydraulic application (cylinder, spreader, etc.) more than 80% of its rated capacity.

The pump’s maximum working pressure is 10,000 psi. Make sure that all hydraulic equipment such as cylinders, hoses, coupler, etc. used with this pump are rated at 10,000 psi or greater.

**Note: When the valve is in RELEASE position, the cylinder advances when the pump is running and retracts when the motor is stopped.**
**When the valve is in the HOLD position, the cylinder advances when the pump is running and, holds when the motor is stopped. The cylinder can be retracted by moving the flipper control valve to the RELEASE position.**

**Note:** To ensure smooth operation, bleed air from the system by fully advancing and retracting the cylinder several times.

**Note:** Do not continue to operate pump after cylinder plunger is fully extended or retracted.

## OPERATION

**Note:** A dump valve with 2-way, 2-position is equipped on the pump to use with Single-acting cylinders or applications.

1. Check oil level, add oil if necessary.
2. Make sure system fittings and connections are tight and leak free.
3. Turn the flipper control valve counter-clockwise to HOLD position.
4. Start the pump by pressing and holding the switch on remote Pendent. Oil advances the cylinder or application when the unit is activated.
5. Always monitor the pressure, load and position.
6. Release the switch on remote Pendent when desired pressure, load or position is reached.
7. To retract the cylinder or application, turn the flipper control valve clockwise to RELEASE position.
8. Depressurize all connections before disconnect.

## MAINTENANCE

1. Keep areas around pump unobstructed in order to provide good air flow around the motor and pump. Try keep the motor and pump as clean as possible.
2. Inspect hoses and connections daily. Replace damaged components immediately with BVA replacement parts only.
3. Tighten connections as needed. Use non-hardening pipe thread compound when servicing connections.
4. Check hydraulic oil level every 40 hours of operation. Add hydraulic oil if necessary.
5. Completely change the hydraulic oil every 300 hours of operation. Change the oil more frequently when pump is used in an extremely dusty environment or when the oil has been overheated. Use only good quality hydraulic oil. We recommend Mobil BVA FJZ01 or equivalent. To order the oil, refer to service parts section.

**Note:** Use only a good quality hydraulic oil. **Never** use brake fluid, transmission fluid, turbine oil, motor oil, alcohol, glycerin etc. Use of other than recommended hydraulic oil, will void warranty and damage the pump, hose, and application.

**Adding Hydraulic Oil**

1. Make sure electric motor is OFF.
2. Depressurize and disconnect hydraulic hose from application.
3. Remove vent cap on the top plate of the reservoir.
4. Use a funnel to fill reservoir to about 2” from top of reservoir plate.
5. Wipe up any spilled fluid and reinstall the vent cap.

**⚠ DANGER**

**TO AVOID ELECTROCUTION HAZARD:**

- Owner, Operator must **read, understand and follow** all printed material provided with this device **before use**.
- Connect **ONLY** to properly **grounded** electrical source. Connect to **GFI** outlet **ONLY!** For use in **dry locations**.
- Avoid the use of extension cords. If used, extension cord lengths up to 25 ft shall be SJT-14X3 or heavier. For cords up to 50 ft, use SJT-12X3 or heavier. For extension cord lengths up to 100 ft, use SJT-10X3 or heavier. **NEVER** use a 3 prong adapter.
- Do not operate this device in an explosive atmosphere or in the presence of conductive liquids.

**Changing Hydraulic Oil**

1. For best results, change hydraulic oil once a year.
2. Remove drain plug, tilt the pump then pour used fluid into a sealable container.
3. Dispose the hydraulic oil in accordance with local regulations.
4. Fill hydraulic oil, then reinstall vent cap.

**Cleaning**

Clean oil filter screen periodically with nonflammable solvent, then blow dry before reassemble back to pump.

**Storage**

1. When not in use, depressurize and disconnect hydraulic hoses from application.
2. Wipe clean, thoroughly.
3. Store in clean, dry environment. Avoid temperature extremes.
4. For transportation or long term storage, shield pump with a protective cover.

## TROUBLESHOOTING

| Symptom | Possible Causes | Corrective Action |
|---|---|---|
| Motor will not start | • No power or wrong voltage<br>• Damaged power cord<br>• Tripped circuit breaker<br>• Loose or faulty wiring | • Check the power supply & voltage<br>• Contact Customer Service<br>• Ensure electrical supply is adequate<br>• Contact Customer Service |
| Erratic cylinder action | • Air in system or pump cavitation<br><br>• External leak<br>• Internal hydraulic leak | • Follow pump instructions for bleeding air<br>• Tighten all connections<br>• Contact Service Center |
| Pump fails to maintain pressure | • External leak<br>• Internal hydraulic leak<br>• Pump or valve malfunctioning | • Tighten all connections<br>• Contact Service Center<br>• Check pump operating instructions |
| Cylinder extends partially | • Hydraulic oil level too low in pump<br>• Load is above the capacity of system<br>• Cylinder is sticking or binding | • Fill and bleed the system<br>• Use the correct equipment<br>• Contact Service Center |
| Cylinder moves slower than normal | • Loose connection or coupler<br>• Restricted hydraulic line or<br>• Pump not working correctly<br>• Cylinder seals leaking | • Tighten<br>• Clean and replace if damaged<br>• Check pump operating instructions<br>• Replace cylinder |
| Cylinder leaks hydraulic fluid | • Worn or damaged seals | • Replace cylinder |
| Cylinder will not retract or retracts<br>slower than normal | • Loose couplers<br>• Weak or broken retraction springs<br>• Cylinder damaged internally<br>• Pump reservoir too full | • Tighten couplers<br>• Replace cylinder<br>• Replace cylinder<br>• Drain hydraulic fluid to correct level |
| Motor cuts out | • Extension cord too long<br>• Faulty motor<br>• Overheated motor can trip circuit breaker | • Replace<br>• Replace or repair<br>• Allow motor to cool, reset circuit breaker |

# Electric Pump Service Parts

**MODEL: PE30W3L01A, PE30W4L01A**

SFA Companies 10939 N. Pomona Ave. Kansas City, MO 64153
Tel: 888-332-6419 * Fax: 816-448-2142
E-mail: sales@bvahydraulics.com Website: www.bvahydraulics.com

**Note:** Not all components of the device are replacement items, but are illustrated as a convenient reference of location and position in the assembly sequence. To ensure safe and reliable performance, replace worn or damaged parts with BVA authorized repair parts only and **ALWAYS provide model and serial number** when ordering.

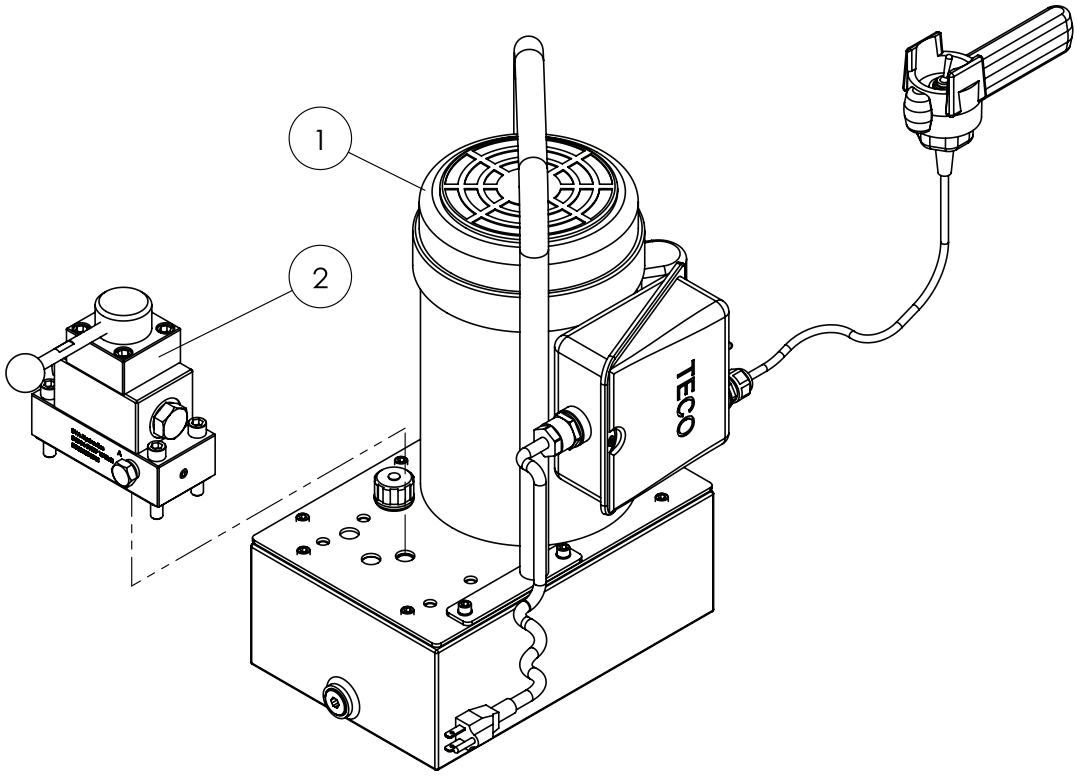


| Item | Part No. | Description | Qty. |
|---|---|---|---|
| 1 | PE30WOP01A * | Motor pump assembly | 1 |
| 2 | PW33L, for S/A Model | 3W/3P Valve (see pg 14 for details) | 1 |
| | PW43L, for D/A Model | 4W/3P Valve (not shown) | 1 |

* Pendent Control is not included

# Electric Pump Service Parts

**MODEL: PE30W3L01A, PE30W4L01A**

SFA Companies 10939 N. Pomona Ave. Kansas City, MO 64153
Tel: 888-332-6419 * Fax: 816-448-2142
E-mail: sales@bvahydraulics.com Website: www.bvahydraulics.com

**Note:** Not all components of the device are replacement items, but are illustrated as a convenient reference of location and position in the assembly sequence. To ensure safe and reliable performance, replace worn or damaged parts with BVA authorized repair parts only and **ALWAYS provide model and serial number** when ordering.

| Item | Part No. | Description | Qty. |
|---|---|---|---|
| 1 | E06-4-9000-108 | 0.5 HP TECO Motor | 1 |
| 2 | E05-6-9002-107 | Gasket, Motor | 1 |
| 3 | E05-6-9003-109 | Reservoir Cover | 1 |
| 4 | E05-6-9004-101 | Reservoir Gasket | 1 |
| 5 | E05-4-3000-101 | Upper Plate Assy | 1 |
| 6 | E05-6-9006-105 | Eccentric Shaft, 5/8" | 1 |
| 7 | 622-6-0318-203 | Needle Bearing | 1 |
| 8 | E05-6-9007-107 | Eccentric Sleeve Bearing | 1 |
| 9 | E05-4-4000-106 | Piston Block Assy (see pg 16 for details) | 2 |
| 10 | 511-7-0064-109 | O-ring | 2 |
| 11 | E05-4-5000-101 | Lower Plate Assy | 1 |
| 12 | E05-4-2000-106 | Oil Filler Cap | 1 |
| 13 | 649-1-0060-407 | Bolt | 10 |
| 14 | 601-3-0064-106 | Gasket | 10 |
| 16 | 649-1-0095-204 | Socket head cap screw | 4 |
| 17 | E05-4-8000-106 | Safety Valve Set (see pg 20 for details) | 1 |
| 18 | 649-1-0063-403 | Socket Head Cap Screw | 4 |
| 19 | E05-4-6000-106 | Gear Pump Assy (see pg 17 for details) | 1 |
| 20 | H23-6-1000-102 | Magnet | 1 |
| 21 | E05-3-9005-105 | Reservoir, 1 Gal | 1 |
| 22 | 532-3-0160-104 | Washer | 1 |
| 23 | E05-6-8008-104 | Hex Plug | 1 |
| 24 | E05-3-7000-105 | Handle Weldment | 1 |
| 25 | PEW01 | Pendent Control | 1 |
| - | E05-3-9940-102 | Piston Block Assy Repair Kit | 1 |
| - | E05-3-9902-105 | Reservoir Bolt Kit | 1 |
| - | E05-3-9980-105 | Unloading Block Assy Repair Kit | 1 |
| - | E05-3-9960-109 | Gear Pump Assy Repair Kit | 1 |
| - | E05-3-9901-103 | Hex Plug Kit | 1 |
| - | FJZ01 | Hydraulic Oil, 1 Gal | 1 |

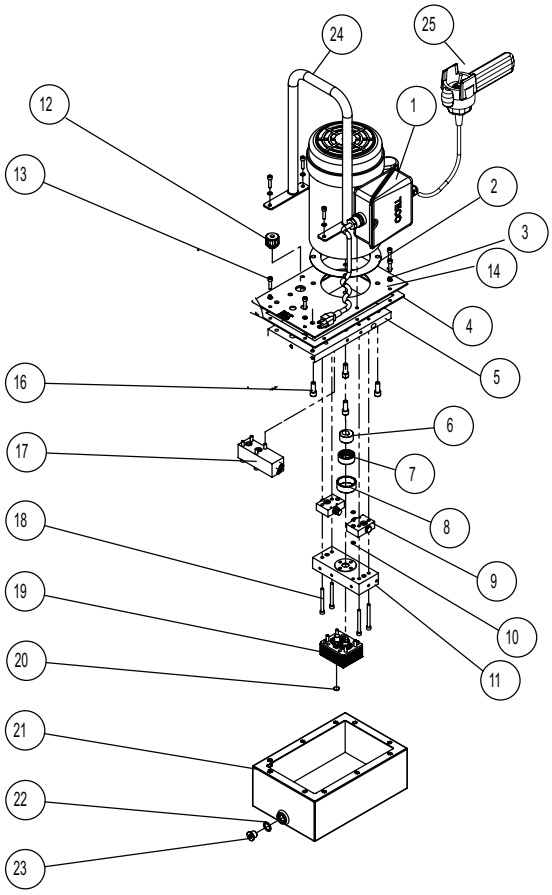


** Manifold Kit includes: manifold block, manifold gasket, bolts, remote control, cable

***Repair requires special skills, knowledge, and equipment. Only** an authorized service center may perform the repair and/or replacement of these items. Contact BVA technical service for list of service centers.

# Electric Pump Service Parts

**MODEL: PE40W3L02A, PE40W4L02A, PE40W3L05A**

SFA Companies 10939 N. Pomona Ave. Kansas City, MO 64153
Tel: 888-332-6419 * Fax: 816-448-2142
E-mail: sales@bvahydraulics.com Website: www.bvahydraulics.com

**Note:** Not all components of the device are replacement items, but are illustrated as a convenient reference of location and position in the assembly sequence. To ensure safe and reliable performance, replace worn or damaged parts with BVA authorized repair parts only and **ALWAYS provide model and serial number** when ordering.

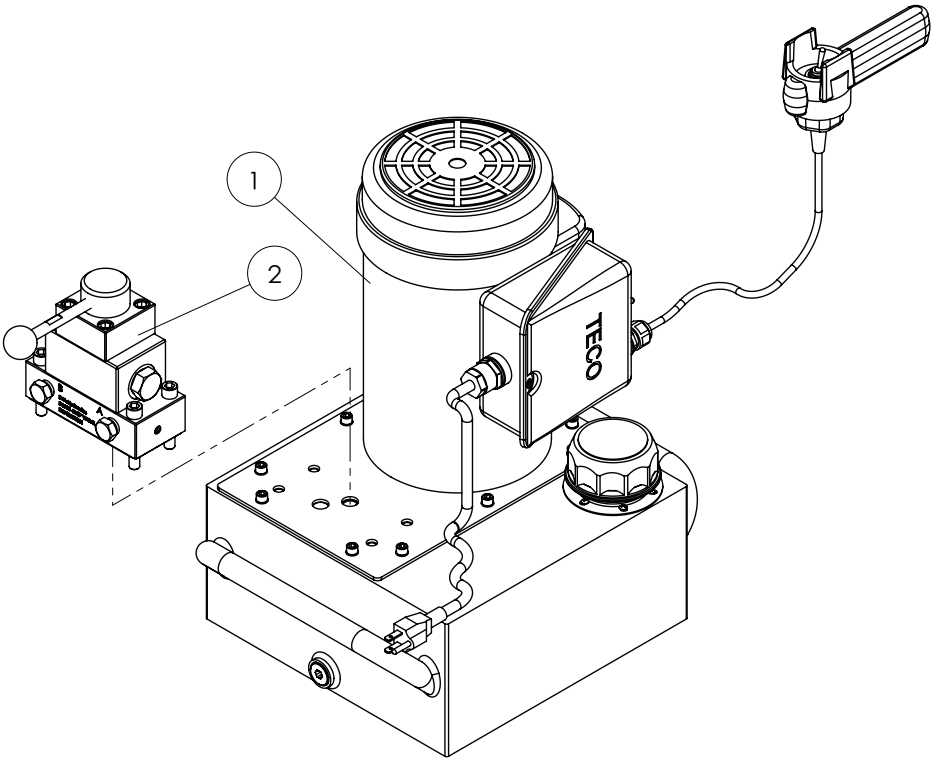


| Item | Part No. | Description | Qty. |
|---|---|---|---|
| 1 | PE40WOP02A * | Motor pump assembly | 1 |
| 2 | PW33L, for S/A Model | 3W/3P Valve (not shown) | 1 |
| | PW43L, for D/A Model | 4W/3P Valve (see pg 15 for details) | 1 |

* Pendent Control is not included

# Electric Pump Service Parts

## MODEL: PE40W3L02A, PE40W4L02A

SFA Companies 10939 N. Pomona Ave. Kansas City, MO 64153
Tel: 888-332-6419 * Fax: 816-448-2142
E-mail: sales@bvahydraulics.com Website: www.bvahydraulics.com

**Note:** Not all components of the device are replacement items, but are illustrated as a convenient reference of location and position in the assembly sequence. To ensure safe and reliable performance, replace worn or damaged parts with BVA authorized repair parts only and **ALWAYS provide model and serial number** when ordering.

| Item | Part No. | Description | Qty. |
|---|---|---|---|
| 1 | E11-4-9000-101 | 1 HP TECO Motor | 1 |
| 2 | E05-6-9002-107 | Gasket, Motor | 1 |
| 3 | E10-6-9003-102 | Reservoir Cover | 1 |
| 4 | E05-6-9004-101 | Reservoir Gasket | 1 |
| 5 | E05-4-3000-101 | Upper Plate Assy | 1 |
| 6 | E05-6-9006-105 | Eccentric Shaft, 5/8" | 1 |
| 7 | 622-6-0318-203 | Needle Bearing | 1 |
| 8 | E05-6-9007-107 | Eccentric Sleeve Bearing | 1 |
| 9 | E10-4-4000-109 | Piston Block Assy (see pg 16 for details) | 2 |
| 10 | 511-7-0064-109 | O-ring | 2 |
| 11 | E05-4-5000-101 | Lower Plate Assy | 1 |
| 12 | E10-4-2000-109 | Oil Filler Cap | 1 |
| 13 | 649-1-0060-407 | Bolt | 10 |
| 14 | 601-3-0064-106 | Gasket | 10 |
| 16 | 649-1-0095-204 | Socket Head Cap Screw | 4 |
| 17 | E05-4-8000-106 | Safety Valve Set (see pg 20 for details) | 1 |
| 18 | 649-1-0063-403 | Socket Head Cap Screw | 4 |
| 19 | E05-4-6001-108 | Gear Pump Assy (see pg 18 for details) | 1 |
| 20 | H23-6-1000-102 | Magnet | 1 |
| 21 | E10-3-9005-108 | Reservoir (2 Gal) | 1 |
| 21a | E30-3-9005-104 | Reservoir (5 Gal) | 1 |
| 22 | 532-3-0160-104 | Washer | 1 |
| 23 | E05-6-8008-104 | Hex Plug | 1 |
| 25 | PEW01 | Pendent Control | 1 |
| - | E05-3-9940-102 | Piston Block Assy Repair Kit | 1 |
| - | E05-3-9902-105 | Reservoir Bolt Kit | 1 |
| - | E05-3-9980-105 | Unloading Block Assy Repair Kit | 1 |
| - | E05-3-9960-109 | Gear Pump Assy Repair Kit | 1 |
| - | FJZ01 | Hydraulic Oil, 1 Gal | 1 |

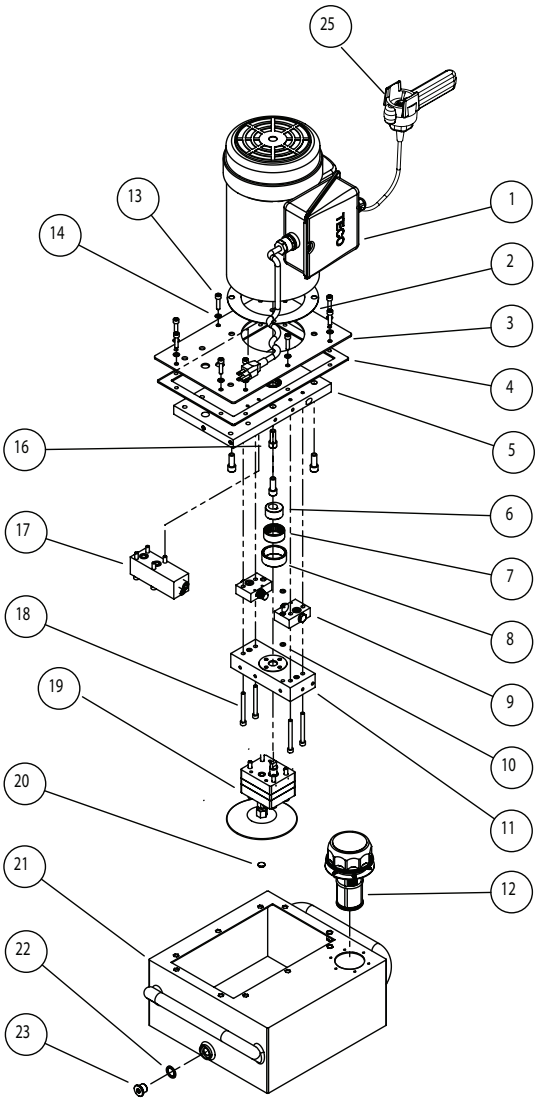


** Manifold Kit includes: manifold block, manifold gasket, bolts, remote control, cable

***Repair requires special skills, knowledge, and equipment. Only** an authorized service center may perform the repair and/or replacement of these items. Contact BVA technical service for list of service centers.

# Electric Pump Service Parts

**MODEL: PE50W3L03A, PE50W4L03A**

SFA Companies 10939 N. Pomona Ave. Kansas City, MO 64153
Tel: 888-332-6419 * Fax: 816-448-2142
E-mail: sales@bvahydraulics.com Website: www.bvahydraulics.com

**Note:** Not all components of the device are replacement items, but are illustrated as a convenient reference of location and position in the assembly sequence. To ensure safe and reliable performance, replace worn or damaged parts with BVA authorized repair parts only and **ALWAYS provide model and serial number** when ordering.

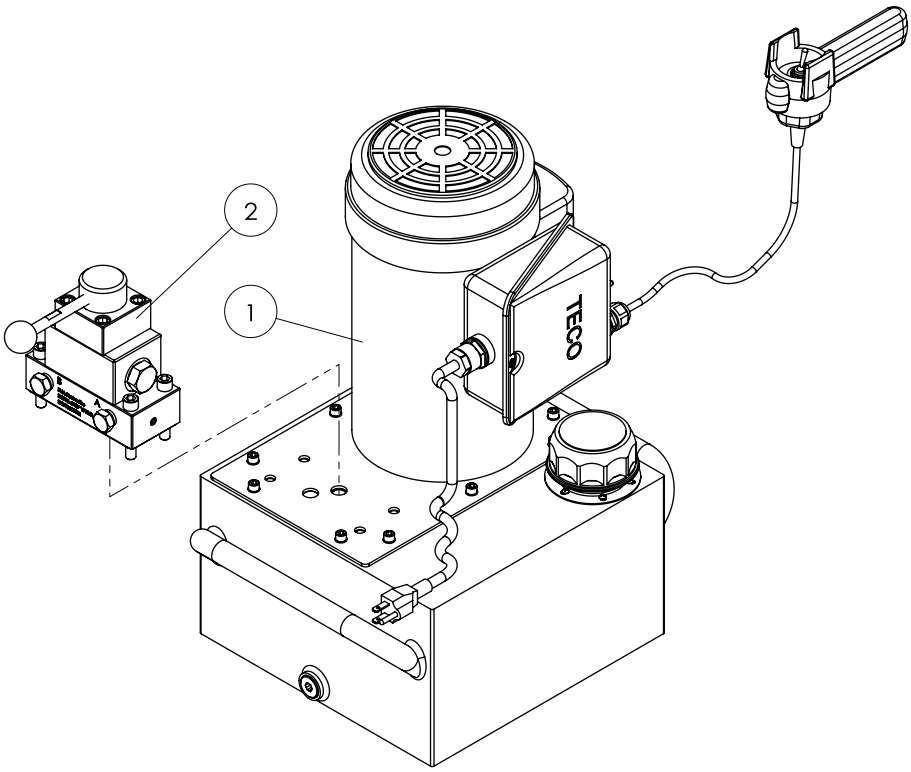


| Item | Part No. | Description | Qty. |
|---|---|---|---|
| 1 | PE50WOP03A * | Motor pump assembly | 1 |
| 2 | PW33L, for S/A Model | 3W/3P Valve (not shown) | 1 |
| | PW43L, for D/A Model | 4W/3P Valve (see page 15 for details) | 1 |

* Pendent Control is not included

# Electric Pump Service Parts

**MODEL: PE50W3L03A, PE50W4L03A**

SFA Companies 10939 N. Pomona Ave. Kansas City, MO 64153
Tel: 888-332-6419 * Fax: 816-448-2142
E-mail: sales@bvahydraulics.com Website: www.bvahydraulics.com

**Note:** Not all components of the device are replacement items, but are illustrated as a convenient reference of location and position in the assembly sequence. To ensure safe and reliable performance, replace worn or damaged parts with BVA authorized repair parts only and **ALWAYS provide model and serial number** when ordering.

| Item | Part No. | Description | Qty. |
|---|---|---|---|
| 1 | E16-4-9000-106 | 1.5 HP TECO Motor | 1 |
| 2 | E05-6-9002-107 | Gasket, Motor | 1 |
| 3 | E10-6-9003-102 | Reservoir Cover | 1 |
| 4 | E05-6-9004-101 | Reservoir Gasket | 1 |
| 5 | E15-4-3000-109 | Upper Plate Assy | 1 |
| 6 | E05-6-9006-105 | Eccentric Shaft, 5/8" | 1 |
| 7 | 622-6-0318-203 | Needle Bearing | 1 |
| 8 | E05-6-9007-107 | Eccentric Sleeve Bearing | 1 |
| 9 | E15-4-4000-104 | Piston Block Assy (see pg 16 for deatails) | 2 |
| 10 | 511-7-0064-109 | O-ring | 2 |
| 11 | E05-4-5000-109 | Lower Plate Assy | 1 |
| 12 | E10-4-2000-109 | Oil Filler Cap | 1 |
| 13 | 649-1-0060-407 | Bolt | 10 |
| 14 | 601-3-0064-106 | Gasket | 10 |
| 16 | 649-1-0095-204 | Socket Head Cap Screw | 4 |
| 17 | E05-4-8000-106 | Safety Valve Set (see pg 20 for details) | 1 |
| 18 | 649-1-0063-403 | Socket Head Cap Screw | 4 |
| 19 | E15-4-6002-108 | Gear Pump Assy (see pg 19 for details) | 1 |
| 20 | H23-6-1000-102 | Magnet | 1 |
| 21 | E15-3-9005-103 | Reservoir (3 Gal) | 1 |
| 22 | 532-3-0160-104 | Washer | 1 |
| 23 | E05-6-8008-104 | Hex Plug | 1 |
| 25 | PEW01 | Pendent Control | 1 |
| - | E15-3-9940-101 | Piston Block Assy Repair Kit | 1 |
| - | E05-3-9902-105 | Reservoir Bolt Kit | 1 |
| - | E05-3-9980-105 | Unloading Block Assy Repair Kit | 1 |
| - | E15-3-9960-107 | Gear Pump Assy Repair Kit | 1 |
| - | E05-3-9901-103 | Hex Plug Kit | 1 |
| - | FJZ01 | Hydraulic Oil, 1 Gal | - |

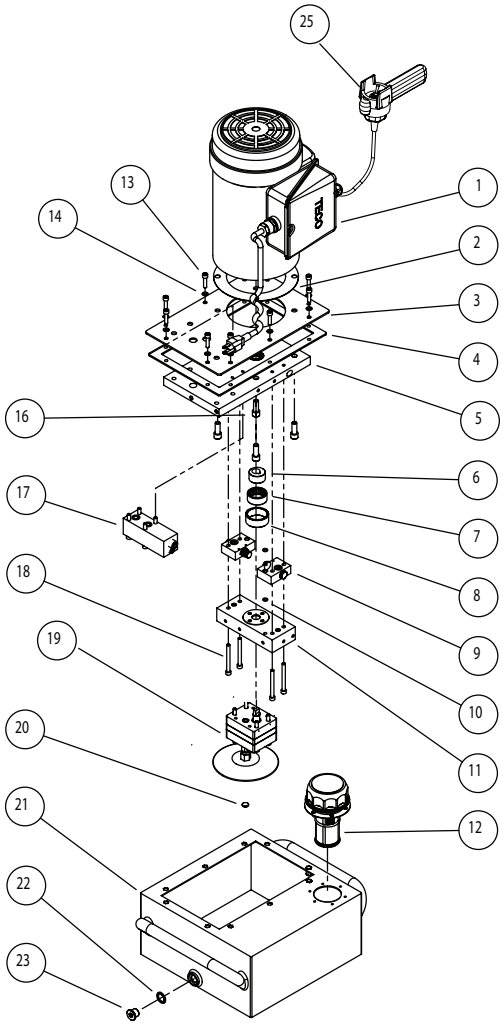


** Manifold Kit includes: manifold block, manifold gasket, bolts, remote control, cable

***Repair requires special skills, knowledge, and equipment. Only** an authorized service center may perform the repair and/or replacement of these items. Contact BVA technical service for list of service centers.

# Electric Pump Service Parts

**MODEL: PE50W3L05A, PE50W4L05A**

SFA Companies 10939 N. Pomona Ave. Kansas City, MO 64153
Tel: 888-332-6419 * Fax: 816-448-2142
E-mail: sales@bvahydraulics.com Website: www.bvahydraulics.com

**Note:** Not all components of the device are replacement items, but are illustrated as a convenient reference of location and position in the assembly sequence. To ensure safe and reliable performance, replace worn or damaged parts with BVA authorized repair parts only and **ALWAYS provide model and serial number** when ordering.

| Item | Part No. | Description | Qty. |
|---|---|---|---|
| 1 | E16-4-9000-106 | 1.5 HP TECO Motor | 1 |
| 2 | E05-6-9002-107 | Gasket, Motor | 1 |
| 3 | E10-6-9003-102 | Reservoir Cover | 1 |
| 4 | E05-6-9004-101 | Reservoir Gasket | 1 |
| 5 | E15-4-3000-109 | Upper Plate Assy | 1 |
| 6 | E05-6-9006-105 | Eccentric Shaft, 5/8" | 1 |
| 7 | 622-6-0318-203 | Needle Bearing | 1 |
| 8 | E05-6-9007-107 | Eccentric Sleeve Bearing | 1 |
| 9 | E15-4-4000-104 | Piston Block Assy (see pg 16 for details) | 2 |
| 10 | 511-7-0064-109 | O-ring | 2 |
| 11 | E05-4-5000-109 | Lower Plate Assy | 1 |
| 12 | E10-4-2000-109 | Oil Filler Cap | 1 |
| 13 | 649-1-0060-407 | Bolt | 10 |
| 14 | 601-3-0064-106 | Gasket | 10 |
| 16 | 649-1-0095-204 | Socket Head Cap Screw | 4 |
| 17 | E05-4-8000-106 | Safety Valve Set (see pg 20 for details) | 1 |
| 18 | 649-1-0063-403 | Socket Head Cap Screw | 4 |
| 19 | E15-4-6002-108 | Gear Pump Assy (see pg 19 for details) | 1 |
| 20 | H23-6-1000-102 | Magnet | 1 |
| 21 | E30-3-9005-104 | Reservoir (5 Gal) | 1 |
| 22 | 532-3-0160-104 | Washer | 1 |
| 23 | E05-6-8008-104 | Hex Plug | 1 |
| 25 | PEW01 | Pendent Control | 1 |
| - | E15-3-9940-101 | Piston Block Assy Repair Kit | 1 |
| - | E05-3-9902-105 | Reservoir Bolt Kit | 1 |
| - | E05-3-9980-105 | Unloading Block Assy Repair Kit | 1 |
| - | E15-3-9960-107 | Gear Pump Assy Repair Kit | 1 |
| - | E05-3-9901-103 | Hex Plug Kit | 1 |
| - | FJZ01 | Hydraulic Oil, 1 Gal | - |

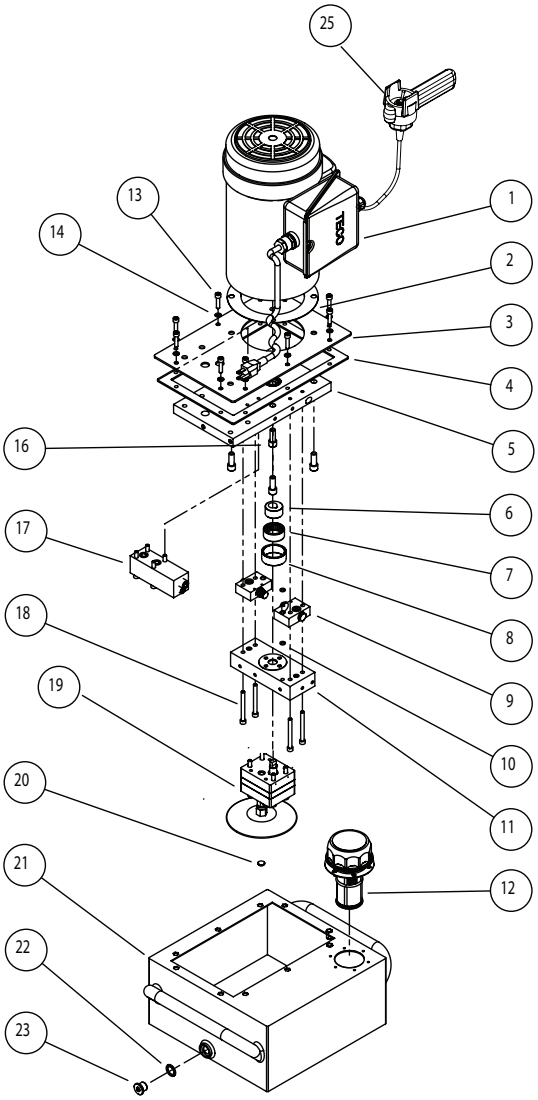


** Manifold Kit includes: manifold block, manifold gasket, bolts, remote control, cable

***Repair requires special skills, knowledge, and equipment. Only** an authorized service center may perform the repair and/or replacement of these items. Contact BVA technical service for list of service centers.

# Locking Valve Service Parts

## MODEL: PW33L

SFA Companies 10939 N. Pomona Ave. Kansas City, MO 64153
Tel: 888-332-6419 * Fax: 816-448-2142
E-mail: sales@bvahydraulics.com Website: www.bvahydraulics.com

**Note:** Not all components of the device are replacement items, but are illustrated as a convenient reference of location and position in the assembly sequence. To ensure safe and reliable performance, replace worn or damaged parts with BVA authorized repair parts only and **ALWAYS provide model and serial number** when ordering.

| Item | Part No. | Description | Qty. |
|---|---|---|---|
| 1 | E05-6-1002-107 | CAP VALVE | 1 |
| 2 | *1 | SOCKET HEAD CAP SCREW | 4 |
| 3 | *2 | SPRING DETENT | 1 |
| 4 | *2 | CHROME STEEL BALLS | 2 |
| 5 | E05-6-1003-109 | VALVE BONNET | 1 |
| 6 | *2 | O-RING | 1 |
| 7 | *2 | O-RING | 1 |
| 8 | 611-3-0200-106 | THRUST WASHER | 1 |
| 9 | 622-6-0200-109 | THRUST BEARING | 1 |
| 10 | E05-3-1005-105 | ROTOR WELDING | 1 |
| 11 | E05-4-1001-103 | SHEAR SEAL ASSEMBLY | 3 |
| 12 | *2 | SPRING WASHER | 3 |
| 13 | D09-6-1014-103 | VALVE BLOCK | 1 |
| 14 | *1 | SOCKET HEAD CAP SCREW | 4 |
| 15 | 609-1-0075-105 | HEX SOCKET PIPE PLUG | 2 |
| 16 | *2 | GASKET - VALVE | 1 |
| 17 | 641-1-0100-104 | SOCKET HEAD CAP SCREW | 1 |
| 18 | E05-6-1009-101 | VALVE HANDLE SYSTEM | 1 |
| 19 | E05-6-1008-109 | BALL KNOB | 1 |
| 20 | 601-4-0060-101 | ROLL PIN | 1 |
| 21 | D05-6-1001-106 | HEX SOCKET PIPE PLUG | 1 |
| 22 | E05-4-1004-200 | ADAPTOR ASSEMBLY | 1 |
| 23 | E05-6-3001-105 | PIN | 2 |
| 24 | *3 | LOCKING VALVE ASSY. | 1 |
| 25 | E05-4-1012-108 | CIRCULAR INTERNAL | 1 |

| Repair Kits | | |
|---|---|---|
| *1 | D09-4-1006-102 | LOCKING VALVE ASSY. |
| *2 | E05-6-1012-100 | CIRCULAR INTERNAL NUTS SADDLE |
| *3 | 608-3-0008-105 | CIRCULAR INTERNAL NUTS |

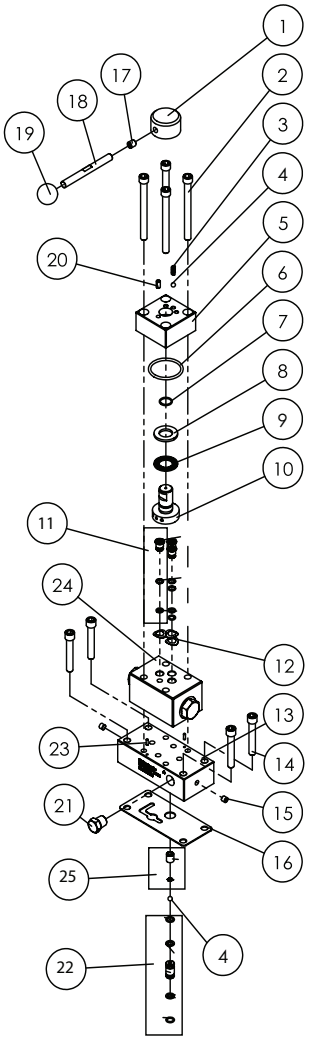


Fig. 7 PW33L Parts Illustration

***Repair requires special skills, knowledge, and equipment. Only** an authorized service center may perform the repair and/or replacement of these items. Contact BVA technical service for list of service centers.

# Locking Valve Service Parts

## MODEL: PW43L

SFA Companies 10939 N. Pomona Ave. Kansas City, MO 64153
Tel: 888-332-6419 * Fax: 816-448-2142
E-mail: sales@bvahydraulics.com Website: www.bvahydraulics.com

**Note:** Not all components of the device are replacement items, but are illustrated as a convenient reference of location and position in the assembly sequence. To ensure safe and reliable performance, replace worn or damaged parts with BVA authorized repair parts only and **ALWAYS provide model and serial number** when ordering.

| Item | Part No. | Description | Qty. |
|---|---|---|---|
| 1 | E05-6-1002-107 | CAP VALVE | 1 |
| 2 | *1 | SOCKET HEAD CAP SCREW | 4 |
| 3 | *2 | SPRING DETENT | 1 |
| 4 | *2 | CHROME STEEL BALLS | 2 |
| 5 | E05-6-1003-109 | VALVE BONNET | 1 |
| 6 | *2 | O-RING | 1 |
| 7 | *2 | O-RING | 1 |
| 8 | 611-3-0200-106 | THRUST WASHER | 1 |
| 9 | 622-6-0200-109 | THRUST BEARING | 1 |
| 10 | E05-3-1005-105 | ROTOR WELDING | 1 |
| 11 | E05-4-1001-103 | SHEAR SEAL ASSEMBLY | 3 |
| 12 | *2 | SPRING WASHER | 3 |
| 13 | D09-6-1024-106 | VALVE BLOCK | 1 |
| 14 | *1 | SOCKET HEAD CAP SCREW | 4 |
| 15 | 609-1-0075-105 | HEX SOCKET PIPE PLUG | 2 |
| 16 | *2 | GASKET - VALVE | 1 |
| 17 | 641-1-0100-104 | SOCKET HEAD CAP SCREW | 1 |
| 18 | E05-6-1009-101 | VALVE HANDLE SYSTEM | 1 |
| 19 | E05-6-1008-109 | BALL KNOB | 1 |
| 20 | 601-4-0060-101 | ROLL PIN | 1 |
| 21 | D05-6-1001-106 | HEX SOCKET PIPE PLUG | 2 |
| 22 | E05-4-1004-200 | ADAPTOR ASSEMBLY | 1 |
| 23 | E05-6-3001-105 | PIN | 2 |
| 24 | *3 | LOCKING VALVE ASSY. | 1 |
| 25 | E05-4-1012-108 | CIRCULAR INTERNAL | 1 |

| Repair Kits | | |
|---|---|---|
| *1 | D09-3-9952-109 | VALVE ASSEMBLY BOLT REPAIR KIT |
| *2 | E05-3-9911-106 | VALVE ASSEMBLY REPAIR KIT |
| *3 | D09-3-9905-100 | LOCKING VALVE ASSY. REPAIR KIT |

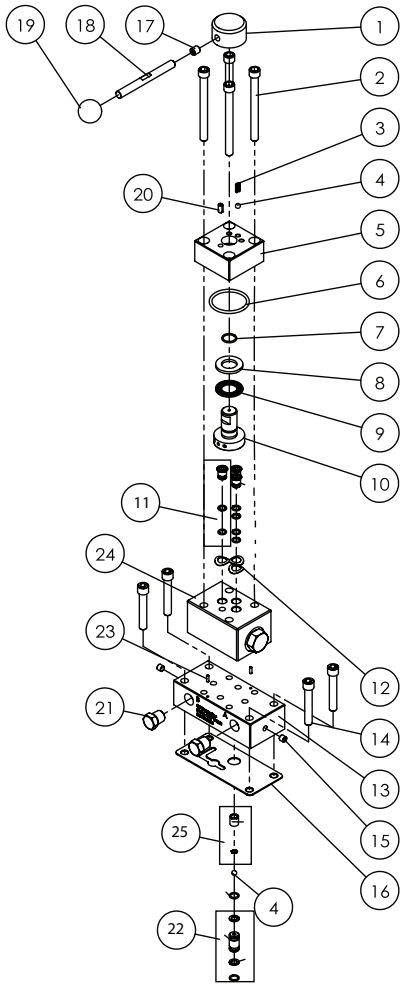


Fig. 8 PW43L Parts Illustration

***Repair requires special skills, knowledge, and equipment. Only** an authorized service center may perform the repair and/or replacement of these items. Contact BVA technical service for list of service centers.

# Pump Piston Set

**PART: E05-4-4000-106, E10-4-4000-109, E15-4-4000-104**

SFA Companies 10939 N. Pomona Ave. Kansas City, MO 64153
Tel: 888-332-6419 * Fax: 816-448-2142
E-mail: sales@bvahydraulics.com Website: www.bvahydraulics.com

Not all components of the pump are replacemet items, but are illustrated as a convenient reference of location and position i n the assembly sequence.

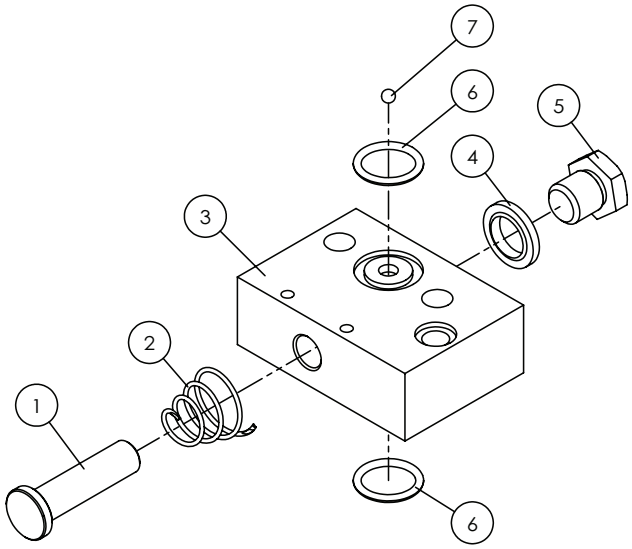


| | MODELS: | | | | |
|---|---|---|---|---|---|
| | E05-4-4000-106 (0.5 HP) | E10-4-4000-109 (1.0 HP) | E15-4-4000-401 (1.5 HP) | | |
| Item | Part Number | | | Description | Qty. |
| 1 | E05-6-4000-108 | E10-6-4000-101 | E15-6-4000-106 | Piston | 1 |
| 2 | * | | | Spring | 1 |
| 3 | N/A | | | Piston Block | 1 |
| 4 | H18-6-8103-104 | | | Washer | 1 |
| 5 | E05-6-4002-102 | | | Hex Head Plug | 1 |
| 6 | * | | | O-Ring | 2 |
| 7 | * | | | Ball | 1 |
| * | E05-3-9940-102 | | E15-3-9940-101 | Repair Kits | 1 |
| * | E15-3-9940-101 | | | Piston Block Assembly Repair Kit | 1 |

# Gear Pump Assembly

**PART: E05-4-6000-106**

SFA Companies 10939 N. Pomona Ave. Kansas City, MO 64153
Tel: 888-332-6419 * Fax: 816-488-2142
E-mail: sales@bvahydraulics.com Website: www.bvahydraulics.com

Not all components of the pump are replacemet items, but are illustrated as a convenient reference of location and position i n the assembly sequence.

| Item | Part Number | Description | Qty |
|---|---|---|---|
| 1 | * | Retaining Ring External | 4 |
| 2 | E05-6-6002-102 | Drive Shaft- Gear Pump 1/2 H.P. | 1 |
| 3 | E05-6-6003-104 | Idler Shaft- Gear Pump 1/2 H.P. | 1 |
| 4 | * | Pin Dowel | 2 |
| 5 | E05-6-6004-106 | Gear | 2 |
| 6 | * | Pin Dowel | 2 |
| 7 | E05-6-6000-108 | Center Gear Plate 1/2 H.P. | 1 |
| 8 | E05-6-6001-100 | Lower Gear Plate | 1 |
| 9 | 433-6-2401-106 | Parker Hex Plug | 1 |
| 10 | 649-1-0063-504 | Socket Head Cap Screw | 4 |
| 11 | E05-6-6005-108 | Screen | 1 |
| 12 | 609-1-0050-109 | Round Head Machine Screw | 2 |
| * | E05-3-9960-109 | Repair Kit | 1 |

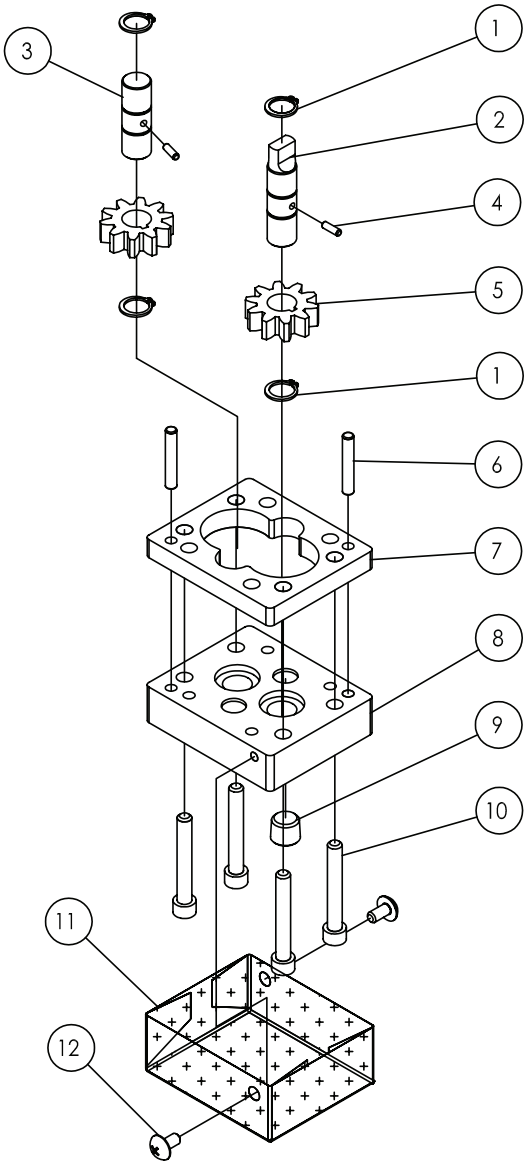

# Gear Pump Assembly

**PART: E05-4-6001-108**

SFA Companies 10939 N. Pomona Ave. Kansas City, MO 64153
Tel: 888-332-6419 * Fax: 816-891-2142
E-mail: sales@bvahydraulics.com Website: www.bvahydraulics.com

Not all components of the pump are replacemet items, but are illustrated as a convenient reference of location and position i n the assembly sequence.

| Item | Part Number | Description | Qty |
|---|---|---|---|
| 1 | * | Retaining Ring External | 4 |
| 2 | E05-6-6002-102 | Drive Shaft- Gear Pump 1.0 H.P. | 1 |
| 3 | E05-6-6003-104 | Idler Shaft- Gear Pump 1.0 H.P. | 1 |
| 4 | * | Pin Dowel | 2 |
| 5 | E05-6-6004-106 | Gear | 2 |
| 6 | * | Pin Dowel | 2 |
| 7 | E05-6-6000-108 | Center Gear Plate 1.0 H.P. | 1 |
| 8 | E05-6-6001-100 | Lower Gear Plate | 1 |
| 9 | 433-6-2401-106 | Parker Hex Plug | 1 |
| 10 | 649-1-0063-504 | Socket Head Cap Screw | 4 |
| 11 | E11-6-7002-107 | Pipe Nipple | 1 |
| 12 | E11-3-6005-100 | Round Head Machine Screw | 2 |
| * | E05-3-9960-109 | Repair Kit | 1 |

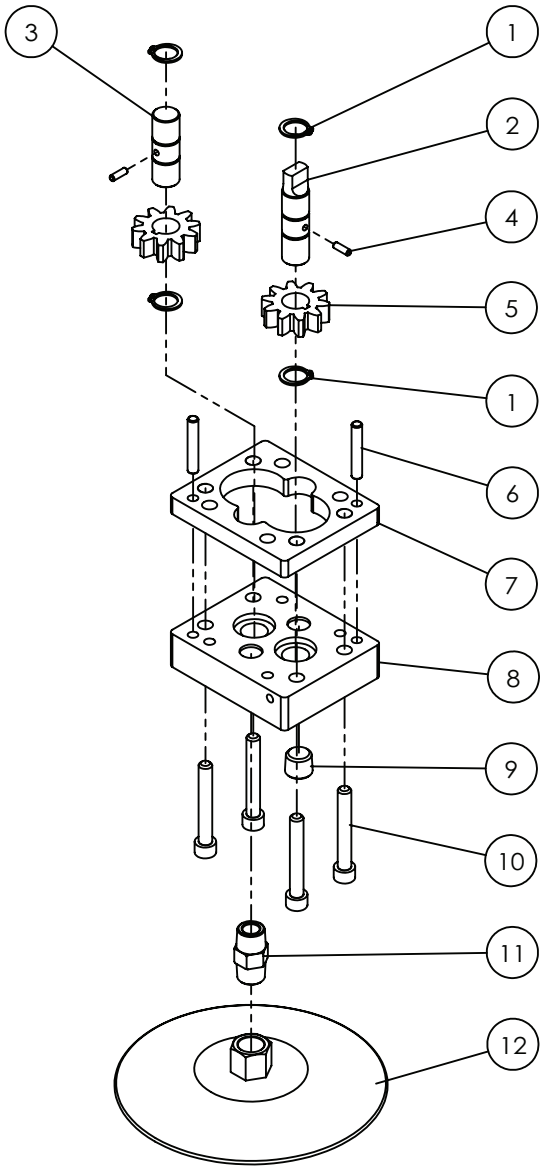

# Gear Pump Assembly

**PART: E15-4-6000-104**

SFA Companies 10939 N. Pomona Ave. Kansas City, MO 64153
Tel: 888-332-6419 * Fax: 816-448-2142
E-mail: sales@bvahydraulics.com Website: www.bvahydraulics.com

Not all components of the pump are replacemet items, but are illustrated as a convenient reference of location and position i n the assembly sequence.

| Item | Part Number | Description | Qty |
|---|---|---|---|
| 1 | * | O-Ring | 2 |
| 2 | E15-4-6005-103 | Upper Gear Plate Assy | 1 |
| 3 | * | Retaining Ring - External | 4 |
| 4 | E10-6-6002-105 | Drive Shaft - Gear Pump | 1 |
| 5 | E10-6-6003-107 | Idler Shaft - Gear Pump | 1 |
| 6 | * | Pin Dowel | 2 |
| 7 | E10-6-6004-109 | Gear | 2 |
| 8 | * | Pin Dowel | 2 |
| 9 | E10-6-6000-101 | Center Gear Plate | 1 |
| 10 | E15-4-6001-105 | Lower Gear Plate Assy | 1 |
| 11 | 433-6-2401-106 | Paker Hex Plug | 1 |
| 12 | 649-1-0063-504 | Socket Head Cap Screw | 4 |
| 13 | 649-1-0063-403 | Socket Head Cap Screw | 4 |
| 14 | E11-6-7003-109 | Pipe Nipple (for 3 Gal) | 1 |
| | E11-6-7004-101 | Pipe Nipple (for 5 Gal) | |
| 15 | E11-3-6005-100 | Screen | 1 |
| * | E15-3-9960-107 | Repair Kit | 1 |

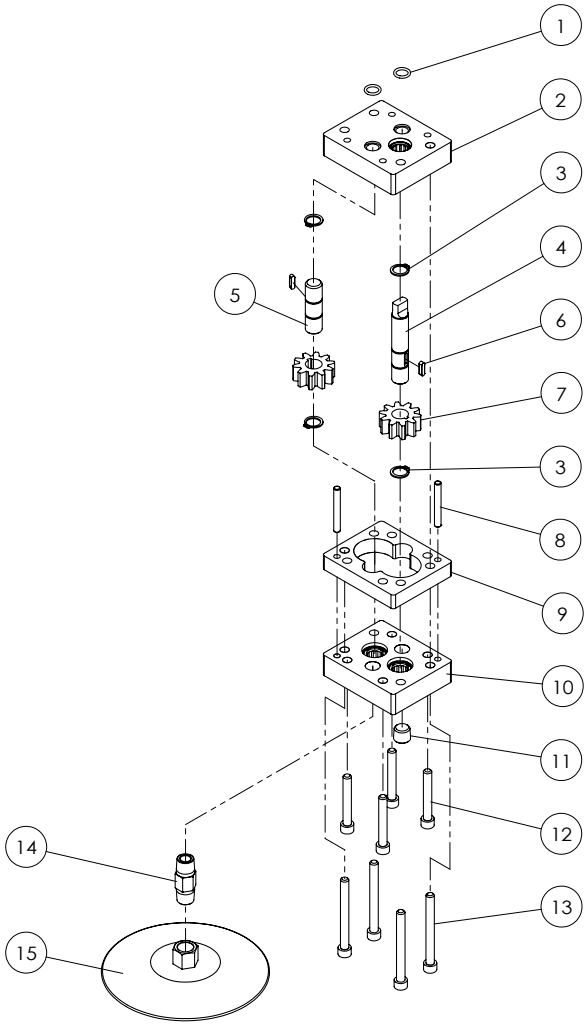

# Safety Valve Set

**PART: E05-4-8000-106**

SFA Companies 10939 N. Pomona Ave. Kansas City, MO 64153
Tel: 888-332-6419 * Fax: 816-448-2142
E-mail: sales@bvahydraulics.com Website: www.bvahydraulics.com

Not all components of the pump are replacemet items, but are illustrated as a convenient reference of location and position in the assembly sequence.

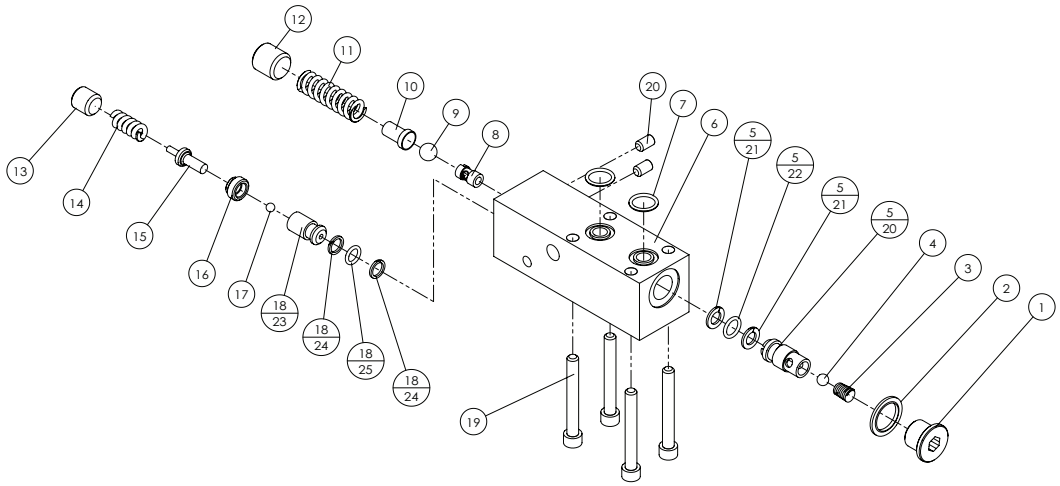


| Item | Part Number | Description | Qty |
|---|---|---|---|
| 1 | E05-6-8008-104 | Parker Hex Plug | 1 |
| 2 | * | Metal Seal | 1 |
| 3 | * | Tapered Spring | 1 |
| 4 | 601-7-0008-009 | Chrome Steel Balls 1/4" | 1 |
| 5 | E05-4-8002-100 | Stick Valve Assy. | 1 |
| 6 | N/A | Block-unloading | 1 |
| 7 | * | O-ring | 2 |
| 8 | E05-6-8001-201 | Unloading PIn | 1 |
| 9 | * | Chrome Steel Balls 3/8" | 1 |
| 10 | E05-6-8005-108 | Ball Retainer | 1 |
| 11 | * | Low Pressure Spring | 1 |

| Item | Part Number | Description | Qty |
|---|---|---|---|
| 12 | 641-1-0158-105 | Socket Head Set Screw | 1 |
| 13 | 641-1-0127-104 | Socket Head Set Screw | 1 |
| 14 | * | High Pressure Spring | 1 |
| 15 | E05-6-8004-106 | Relief Ball Retainer | 1 |
| 16 | E05-6-8006-100 | Hollow Set Screw | 1 |
| 17 | * | Chrome Steel Balls 3/16" | 1 |
| 18 | E05-4-8003-102 | High Pressure Seat Assy. | 1 |
| 19 | 649-1-0063-302 | Socket Head Cap Screw | 4 |
| 20 | 641-1-0060-007 | Hollow Set Screw | 2 |
| * | E05-3-9980-105 | Pressure Adjusting Assy. Repair Kit | 1 |

## LIFETIME LIMITED WARRANTY

BVA Hydraulics®, represented in the United States by Shinn Fu Company of America, Inc. [“SFA”] warrants this product to be free from defects in material and workmanship for the life of the product as long as the original purchaser owns the product. The warranty is non-transferable and is subject to the terms, exclusions, and limitations described below:

- Damaged components, including but not limited to bent rams, dented or crushed cylinder walls, broken welds or couplers as well as worn out seals, o-rings and springs are the result of misuse and not covered by warranty and BVA Hydraulics will not provide any warranty credit for such damaged components.
- This warranty does not cover ordinary wear and tear, overloading, alterations (including repairs or attempted repairs not performed by BVA Hydraulics or one of its authorized personnel), improper fluid use, or use of the product in any manner for which the product was not intended or the use of which is not in accordance with the instructions or warnings provided with the product.
- In the unlikely event that a BVA Hydraulics product fails due to material defect in workmanship, you may contact SFA for disposition. In such cases, the customer’s sole and exclusive remedy for any breach or alleged breach of warranty is limited to the repair or replacement of the defective product.
- Under no circumstances is BVA Hydraulics liable for any consequential or incidental damage or loss whatsoever.
- THIS WARRANTY IS LIMITED TO NEW PRODUCTS SOLD THROUGH AUTHORIZED DISTRIBUTORS AND OTHER CHANNELS DESIGNATED BY BVA HYDRAULICS. NO AGENT, EMPLOYEE OR OTHER REPRESENTATIVE OF BVA HYDRAULICS IS AUTHORIZED TO MODIFY THIS WARRANTY.
- THE FOREGOING IS EXCLUSIVE AND IS IN LIEU OF ALL OTHER EXPRESS AND IMPLIED WARRANTIES, INCLUDING BUT NOT LIMITED TO THE IMPLIED WARRANTIES OF MERCHANTABILITY AND FOR A FITNESS FOR A PARTICULAR PURPOSE.
- Components not manufactured by BVA Hydraulics including certain motor systems, gasoline engines, and other are not covered by this warranty and instead are covered by the manufacturer’s separate manufacturer’s warranty provided in the package.
- BVA Hydraulics’ liability in all cases is limited to, and will not exceed the purchase price paid for the product.

SFA Companies
10939 N. Pomona Ave. Kansas City, MO 64153
Tel: 888-332-6419
E-mail: sales@bvahydraulics.com

# Note Page

Contact:
SFA Companies
10939 N. Pomona Ave.  Kansas City, MO 64153, U.S.A.
Tel:(888)332-6419  Fax:(816) 448-2142
E-Mail:sales@bvahydraulics.com
BVA Website: http://www.bvahydraulics.com

# Note Page

Contact:
SFA Companies
10939 N. Pomona Ave.  Kansas City, MO 64153, U.S.A.
Tel:(888)332-6419  Fax:(816) 448-2142
E-Mail:sales@bvahydraulics.com
BVA Website: http://www.bvahydraulics.com

# Note Page

Contact:
SFA Companies
10939 N. Pomona Ave.  Kansas City, MO 64153, U.S.A.
Tel:(888)332-6419  Fax:(816) 448-2142
E-Mail:sales@bvahydraulics.com
BVA Website: http://www.bvahydraulics.com