Air Hydraulic Pumps Instruction Manual

MODELS: PAR1703, PARD1701, PARD1703, PARM1703

SFA Companies 10939 N. Pomona Ave. Kansas City, MO 64153
Tel: 888-332-6419 * Fax: 816-891-6599
E-mail: sales@bvahydraulics.com Website: www.bvahydraulics.com

This is the safety alert symbol. It is used to alert you to potential personal injury hazards. Obey all safety messages that follow this symbol to avoid possible injury or death.

Maximum Operating Pressure 10,000 PSI

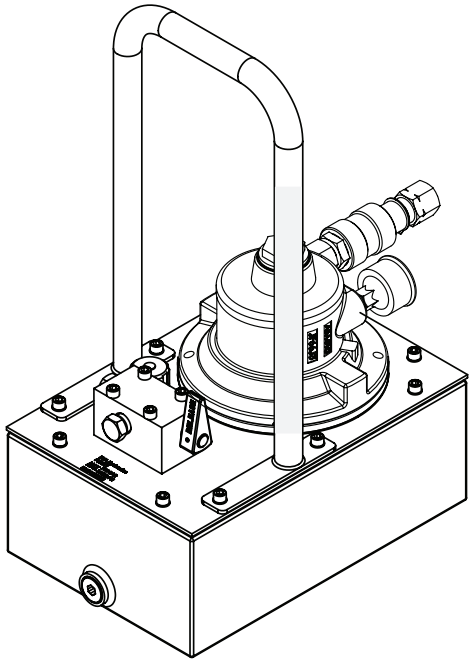

PARD1701

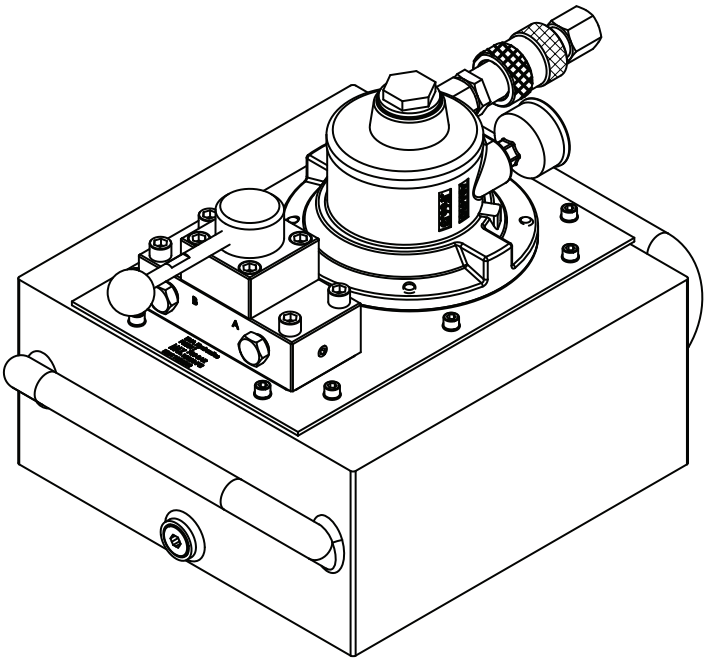

PAR1703

Printed in Taiwan

Save these instructions. For your safety, read and understand the information contained within. The owner and operator shall have an understanding of this product and safe operating procedures before attempting to use this product. Instructions and safety information shall be conveyed in the operator's native language before use of this product is authorized. Make certain that the operator thoroughly understands the inherent dangers associated with the use and misuse of the product. If any doubt exists as to the safe and proper use of this product as outlined in this factory authorized manual, remove from service immediately.

Inspect before each use. It is recommended that, prior to each use, an inspection be done by qualified personnel and that any missing or damaged parts, decals, warning/ safety labels or signs be replaced with BVA Hydraulics authorized replacement parts only. Any pump that appears to be damaged in any way, is worn, leaking or operates abnormally shall be removed from service immediately until such time as repairs can be made. Any pump that has been or suspected to have been subject to a shock load (a load dropped suddenly, causing the system pressure to exceed 10,000 PSI), shall be removed from service immediately until checked out by a BVA Hydraulics authorized service center. Owners and operators of this equipment shall be aware that the use and subsequent repair of this equipment may require special training and knowledge.

*Applications may react **instantly** to the high volume, high pressure fluid provided by this pump! **Only** competent, skilled and adequately trained individuals shall operate this equipment!*

PRODUCT DESCRIPTION

BVA Rotary Air Hydraulic Pumps provide high volume, high pressure fluid to compatible applications i.e. rams, presses, spreaders, compactors and crimping machines, anywhere that 10,000 PSI of fluid pressure is needed. Special skill, knowledge and training may be required for a specific task and the product may not be suitable for all the jobs described above. Unsuitable applications would include applications that call for a device to move, level or support persons, animals, hazardous materials, mobile homes/ dwellings in general, mirrors and/or plate glass, and/or to connect/secure hatches, components, etc. between bulkheads. The user must ultimately make the decision regarding suitability of the product for any given task and assume the responsibility of safety for himself or herself and others in the work area.

To reduce the risk of personal injury and/or property damage, ensure that the rated working pressure of each pressurized attachment be equal to or greater than the rated working pressure developed by the hydraulic pump.

***Always** check connections before using. Alteration of these products is strictly prohibited. Use **only** those adapters and attachments provided and approved by the manufacturer.*

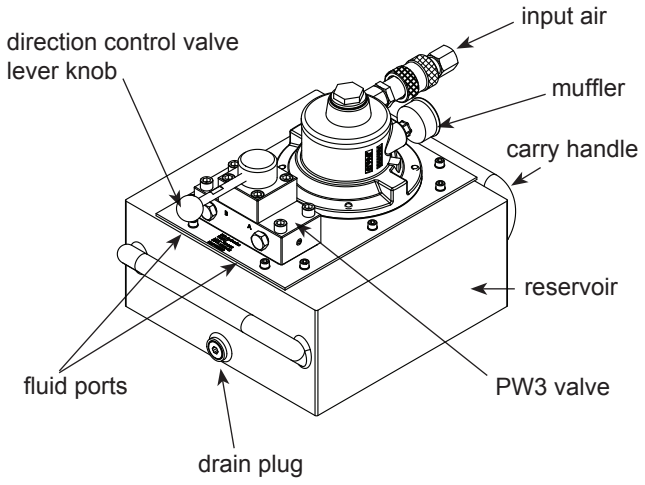

Figure 1 - Model PAR1703 Components

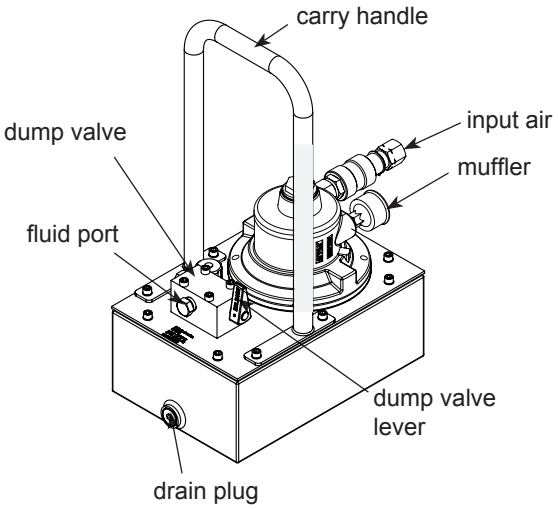

Figure 2 - Model PARD1701 Components

This is the safety alert symbol. It is used to alert you to potential personal injury hazards. Obey all safety messages that follow this symbol to avoid possible injury or death.

WARNING

- **Study, understand, and follow** all instructions provided with and on this device **before use**.
- All WARNING statements must be carefully observed to help prevent personal injury.
- No alteration shall be made to this device.
- Always wear protective gear when operating hydraulic equipment.
- Keep hydraulic equipment away from flames and heat. Hydraulic fluid can ignite and burn. Do not operate if leaks are detected.
- **Crush Hazard.** Keep hands and feet away from loading area. Avoid pinch points or crush points that can be created by the load, cylinder, or any equipment of system.
- To avoid crushing and related injuries: **NEVER** work on, under or around a lifted load before it is properly supported by appropriate mechanical means. **Never rely on hydraulic pressure alone to support load**.

HYDRAULIC PUMPS

- The user must be a qualified operator familiar with the correct operation, maintenance, and use of pumps. Lack of knowledge in any of these areas can lead to personal injury.
- Do not exceed rated capacity of the pump or any equipment in the system.
- Never attempt to lift a load weighing more than the capacity of the cylinder.
- Burst hazard exists if hose or connection pressure exceeds rated pressure.
- Inspect pump, cylinder, hoses and connections before each use to prevent unsafe conditions from developing. Do not use if they are damaged, altered or in poor condition. Do not operate the system with bent or damaged coupler or damaged threads.
- Never hold or stand directly in line with any hydraulic connections while pressurizing.
- Use gauge or other load measuring instrument to verify load.
- Never attempt to disconnect hydraulic connections under pressure. Release all line pressure before disconnecting hoses.
- Do not subject the pump and its components to shock loads.
- Use only approved accessories and approved hydraulic fluid.
- Never attach ANY component not authorized by manufacturer.
- Always ensure that the chosen application is stable to work on and around.
- Do not connect to application which can return more oil to the reservoir than the pump reservoir can hold.
- Do not connect pump to hydraulic system powered by another pump.
- This device is not suitable for use as support device! As the system load is lifted, use blocking and cribbing to guard against a falling load.
- All personnel must be clear before lowering load or depressurizing the system.
- Never try to disassemble a hydraulic cylinder, refer repairs to qualified, authorized personnel.

HYDRAULIC HOSES & FLUID TRANSMISSION LINES

- Avoid short runs of straight line tubing. Straight line runs do not provide for expansion and contraction due to pressure and/or temperature changes.
- Reduce stress in tube lines. Long tubing runs should be supported by brackets or clips. Before operating the pump, tighten all hose connections with proper tools. Do not overtighten. Connections should only be tightened securely and leak-free. Overtightening can cause premature thread failure or high pressure fittings to burst.
- Should a hydraulic hose ever rupture, burst or need to be disconnected, immediately shut off the pump and release all pressure. Never attempt to grasp a leaking pressurized hose with your hands. The force of escaping hydraulic fluid can inflict injury.
- Do not subject the hose to potential hazard such as fire, sharp objects, extreme heat or cold, or heavy impact.
- Do not allow the hose to kink, twist, curl, crush, cut or bend so tightly that the fluid flow within the hose is blocked or reduced. Periodically inspect the hose for wear.
- Do not pull, position or move setup by the hose.
- Hose material and coupler seals must be compatible with hydraulic fluid used. Hoses also must not come in contact with corrosive materials such as battery acid, creosote-impregnated objects and wet paint. Never paint a coupler or hose.
- **FAILURE TO HEED THESE WARNINGS MAY RESULT IN PERSONAL INJURY AS WELL AS PROPERTY DAMAGE**.

PRODUCT SPECIFICATIONS

Model Number	Use w/ Cylinder	Usable Oil Capacity (gal)	Motor Size (HP)	Pressure Rating (psi)		Oil Output Flow Rate (in^3)		Valve Type	Valve Function	Air Pressure at **rated capacity** (psi)	Air Consumption at **rated capacity** (cfm)
				1st Stage	2nd Stage	1st Stage	2nd Stage				
PARD1701	Single Acting	1	1.7	700	10,000	313	22	Dump	*Advance/ Return	80	44
PARD1703		3									
PAR1703						417		PW3 Manual	Advance/ Hold/Return		
PARM1703	Double Acting							PW4 Manual			

*holds application in position when air is disconnected

Model Number	Sound Level (dBA)	Dimension (in)							Weight (lbs)
		A	B	C	D	E	F	G	
PARD1701	93	19.10	9.39	5.79	4.72	8.07	12.34	15.90	42
PARD1703		-	11.95	8.35	7.28	12.01		17.96	54
PAR1703		11.94	10.53	8.21				18.08	55
PARM1703									

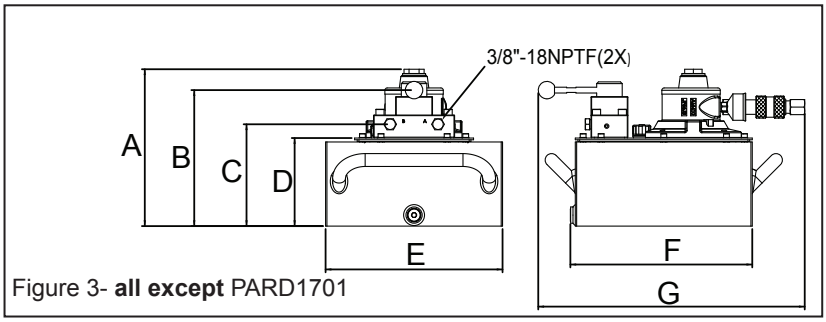

Figure 3- **all except** PARD1701

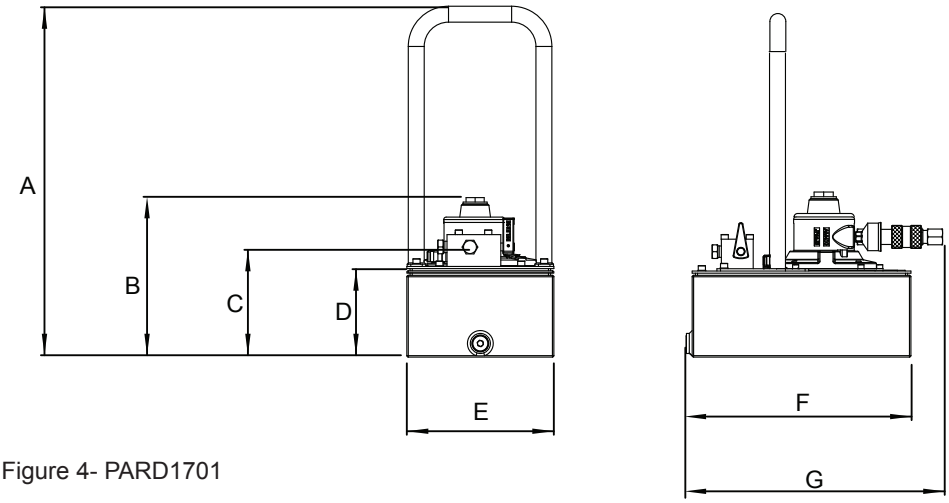

Figure 4- PARD1701

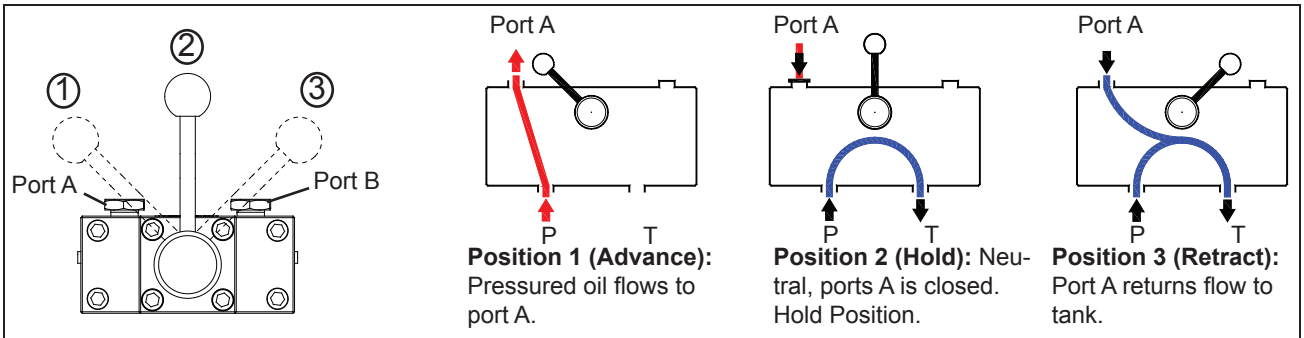

Figure 5- PAR1703 Schematic flow path- PW3 Valve, 3-way, 3-position valve for Single-Acting Cylinder

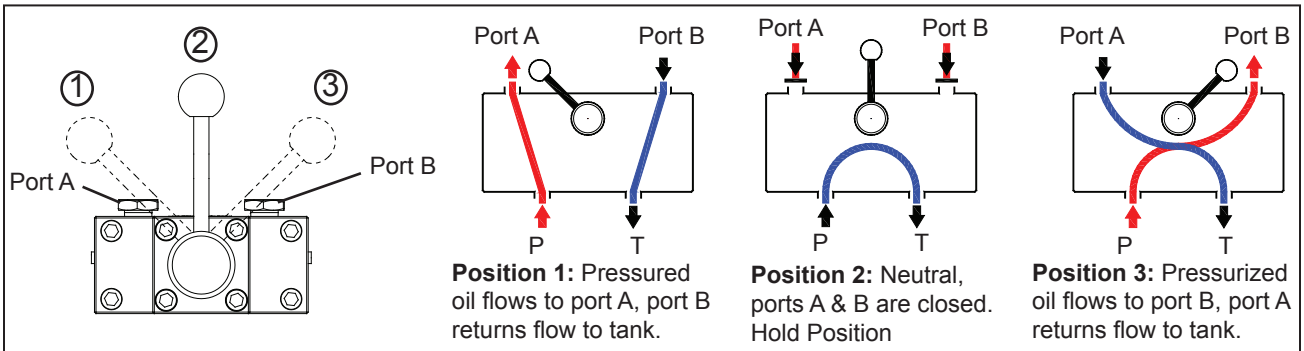

Figure 6- PARM1703 Schematic flow path- PW4 Valve, 4-way, 3-position valve for Double-Acting Cylinder

BEFORE USE AND SET UP

1. Familiarize yourself with the specifications and illustrations in this owners manual. Know your pump, its limitations and how it operates before attempting to use. Refer to specification chart on page 3 for details. If in doubt, contact BVA Hydraulics Technical Service (888) 332-6419.
2. Replace shipping plug (red color) with air vent plug (black color) before use.
3. **Hydraulic Connection:** Clean all areas around the oil port of pump and cylinder. Inspect all threads and fitting for signs of wear or damage and replace as needed. Clean all hose ends, couplers and union ends. Remove the manifold plug, then connect oil output port to suitable fittings and application/cylinder.

IMPORTANT: Always secure threaded port connections with high grade, non-hardening pipe thread sealant. Teflon tape can be used if only one layer of tape is used and it is applied carefully, two threads back, to prevent the tape from being introduced into hydraulic system, which could cause jamming of precision-fit parts.

4. **Air Connection:** After making the necessary hydraulic connections above, connect suitable air supply to air input port. Ensure that your air source can dedicate 44 CFM @ 80 PSI for rated capacity performance. Refer to the page 3 Product Specifications for specific pump requirements.

BVA Pump Mounted Valves are **tandem center** valves. Tandem centered valves allow oil to flow from the pump to tank when in the **NEUTRAL** position.
Tandem centered valves **must** be in "neutral" lever position before starting pump. To pressurize the pump manifold or the application (cylinder, spreader, etc.), simply position the lever left or right of center.

⚠ **PAR1703, PARM1703:**
Once connected to the intended air source, pump will be energized and oil will flow from the pump to the tank. ***Ensure*** *pump lever is in the* ***'neutral' position*** *on pumps equipped with PW3, PW4 valves.*

⚠ **PARD1701, PARD1703:**
Once connected to the intended air source, pump will be energized and oil will flow from the pump to the application. ***ENSURE*** *operator is aware that application will be pressurized* ***immediately*** *upon connecting air source.*

⚠ ***Never*** *operate a pump which is disconnected from application. If operated in this condition, the hose and connections will become pressurized. This increases burst hazard.*

OPERATION(refer to schematic flow path, page 5)

***Always** monitor pressure, load or position using suitable equipment. Pressure may be monitored by means of an optional manifold and gauge. Load may be monitored by means of a load cell and digital indicator. Correct application position can only be determined by the operator of the equipment.*

1. Check oil level, add oil if necessary.
2. Make sure system fittings and connections are tight and leak free.
3. Place control valve lever in the middle (Neutral/Hold) position to prevent accidental lifting or moving of load.

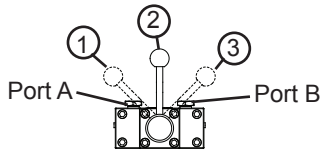

Figure 7- 3-position valve (all except PARD series)

PAR1703 (refer to Figure 5, 7)

***These pumps are for use with a single acting cylinder ONLY!** Connect one hose from either pump oil output port to the input port of a single acting application such as a cylinder. Block the unused output port securely. This model **can not** be used with double acting cylinders.*

*These valves w**ill** reposition the load during handle movement. The amount of load movement will depend on the speed of the handle movement between detent positions.*

4. To **start** the air motor:

4a. Ensure direction control valve lever is in the '2' (neutral) position.

4b. Connect air source to input air connection.

5. **To direct fluid to and from the application**:

5a. Move lever to position '1' to cause fluid to move to the application. Maintain control valve position until the desired pressure, load or position is reached. **Note:** Do not continue to operate pump after cylinder plunger is fully extended or retracted.

5b. Always monitor pressure, load or position using suitable equipment. **Do not** load a hydraulic application (cylinder, spreader, etc.) to more than 80% of its rated capacity.

5c. Shift the control valve until the desired pressure, load or position is reached. **Note:** Do not continue to operate pump after cylinder plunger is fully extended or retracted.

5d. Move lever to position '3' to cause fluid to return to the tank (reservoir).

To turn air motor off:

6. Maintain lever position '3' to depressurize the system.

6a. Disconnect air source from input air connection.

PARM1703 (refer to Figure 6, 7)

***These pumps are for use with a double acting cylinders ONLY!** They **can not** be used with single acting cylinders. Ensure that both A and B ports are properly connected to a double acting application.*

1. Check oil level, add oil if necessary.
2. Make sure system fittings and connections are tight and leak free.
3. Place control valve lever in the middle (Neutral/Hold) position to prevent accidental lifting or moving of load.

OPERATION(continued)

4. To **start** the air motor:

4a. Ensure direction control valve lever is in the '2' (neutral) position.

4b. Connect air source to input air connection.

5. **To direct fluid to and from the application**:

5a. Move lever to position '1' to cause fluid to move to the application. Maintain control valve position until the desired pressure, load or position is reached. **Note:** Do not continue to operate pump after cylinder plunger is fully extended or retracted.

5b. Always monitor pressure, load or position using suitable equipment. **Do not** load a hydraulic application (cylinder, spreader, etc.) to more than 80% of its rated capacity.

5c. Shift the control valve until the desired pressure, load or position is reached. **Note:** Do not continue to operate pump after cylinder plunger is fully extended or retracted.

5d. Move lever to position '3' to cause fluid to return to the tank (reservoir).

To turn air motor off:

6. Maintain lever position '3' to depressurize the system.

6a. Disconnect air source from input air connection.

PARD1701, PARD1703 (see Figure 8)

***These pumps are for use with a single acting cylinder ONLY!** Connect one hose from either pump oil output port to the input port of a single acting application such as a cylinder. Block the unused output port securely. These models **can not** be used with double acting cylinders.*

1. Check oil level, add oil if necessary.
2. Make sure system fittings and connections are tight and leak free.
3. Connect to air source.

PARD1701, PARD1703:
*Once connected to the intended air source, pump will be energized and oil will flow from the pump to the application. **ENSURE** operator is aware that application will be pressurized **immediately** upon connecting air source.*

4. See Figure 8 below for details.

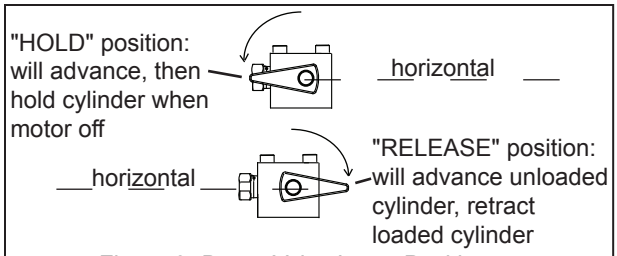

Figure 8- Dump Valve Lever Positions

*To reduce the risk of personal injury and/or property damage, hydraulic connections must be securely fastened before building pressure in the system. Release all hydraulic pressure by disconnecting air source and actuating the 'dump' valve (PARD series) **or** moving the pump lever to 'neutral' (PAR,PARM series) **and** disconnect air source from pump **before** loosening any hydraulic connection in the system.*

MAINTENANCE

Important: Use only good quality hydraulic fluid. **Never** use brake fluid, transmission fluid, turbine oil, motor oil, alcohol, glycerin etc. Use of other than good quality hydraulic oil will void warranty and damage the pump, hose, and application. We recommend Mobil DTE 13M or equivalent.

1. Inspect hoses and connections daily. Replace damaged components immediately.
2. Tighten connections as needed. Use non-hardening pipe thread compound when servicing connections.

Adding Hydraulic Fluid

1. Depressurize and disconnect hydraulic hose from application/ cylinder.
2. With pump in its upright, horizontal position, remove the air vent plug located on the top plate of the reservoir.
3. Use a small funnel to fill the oil to within 3/4" (19mm) of the opening.
4. Wipe up any spilled fluid and reinstall the air vent plug/ reservoir cap.

Changing Hydraulic Fluid

1. For best results, change fluid once a year or every 300 hours of use.
2. Repeat # 2 above, then pour used fluid into a sealable container.
3. Dispose of fluid in accordance with local regulations.
4. Fill with a good quality hydraulic fluid as recommended above. Reinstall air vent plug/ reservoir cap.

Lubrication

When pump is operated on daily basis, the manufacturer recommends installing an inline oiler and air dryer. Use SAE grade oil (5W to 30W).

Storage

1. When not in use, depressurize and disconnect hydraulic pump from application.
2. Wipe clean, thoroughly and store in clean, dry environment. Avoid temperature extremes.
3. For transportation or long storage, replace the air vent plug with shipping plug.

TROUBLESHOOTING GUIDE

The following information is intended as an aid in determining if problem exists. Pumps should be repaired only by authorized BVA Service Center. For repair service, contact service center in your area.

Symptom	Possible Causes	Corrective Action
Application does not extend, move or respond to pressurized fluid	• Overload condition • Loose couplers • Faulty couplers • Pump malfunction • Inadequate air supply	• Remedy overload condition • Tighten couplers • Replace couplers • Contact service center • Ensure air source can dedicate: 44 CFM @ 80 psi for 1.7 hp pumps
Application responds to pressurized fluid, but system does not maintain pressure	• Overload condition • Pump or valve malfunction • Application/connection leaking	• Remedy overload condition • Contact Service Center • Replace application/connection
Application responds slower than normal	• Loose connection or coupler • Restricted hydraulic line or fitting • Application/connection leaking	• Tighten connection or coupler • Clean and replace if damaged • Replace application/connection
Application does not return fluid to pump (i.e. cylinder will not retract)	• Malfunctioning coupler, damaged application	• **Secure load by other means**- **Depressurize** pump and hose, remove coupler and/or application, then renew or replace
Application does not fully extend (cylinder or spreader)	• Reservoir overfilled • Fluid level in pump is low	• **Secure load by other means**- **Depressurize** pump and hose, remove application, then drain fluid to proper level • **Secure load by other means**- **Depressurize** pump and hose, remove application, then fill fluid to proper level
Poor performance	• Fluid level in pump is low	• Ensure proper fluid level

Air Hydraulic Pump Service Parts

MODEL: PAR1703, PARM1703

SFA Companies 10939 N. Pomona Ave. Kansas City, MO 64153
Tel: 888-332-6419 - Fax: 816-891-6599
E-mail: sales@bvahydraulics.com Website: www.bvahydraulics.com

Note: Not all components of the pump are replacement items, but are illustrated as a convenient reference of location and position in the assembly sequence.

Parts Illustration

Item	Part Number	Description	Qty
1	E19-4-9000-107	Air Motor	1
2	E05-6-9002-107	Gasket, Motor	1
3	E05-6-9003-109	Reservoir Cover	1
4	E05-6-9004-101	Gasket, Reservoir	1
5	E05-4-3000-101	Upper Valve Body Assy	1
6	E05-6-9006-105	Eccentric Shaft, 5/8"	1
7	622-6-0318-203	Needle Bearing	1
8	E05-6-9007-107	Eccentric Bearing Sleeve	1
9	E05-4-4000-106	1hp Piston Block Assy	2
10	511-7-0064-109	O-ring	2
11	E05-4-5000-101	Lower Valve Body Assy	1
12	E05-4-2000-106	Oil Filler Vent	1
13	649-1-0060-407	Bolt	10
14	601-3-0064-106	Gasket	10
15	E05-4-1000-101	Control Valve Assy	1
16	649-1-0095-204	Socket Head Cap Screw	4
17	E05-4-8000-106	Safety Valve Block Assy	1
18	649-1-0063-403	Socket Head Cap Screw	4
19	E05-4-6002-100	Gear Pump Assy 1/2 hp	1
20	H23-6-1000-102	Reservoir Magnet	1
21	E19-3-9005-101	Reservoir	1
22	532-3-0160-104	Drain Plug Washer	1
23	E05-6-8008-104	Drain Plug	1
24	E10-6-6005-202	Pump Filter	1
*A	E05-3-9902-105	Reservoir Bolt Kit	1
*B	E05-3-9940-102	Piston Block Repair Kit	1
*C	E05-3-9901-103	Hex Plug Kit	1
*D	E05-3-9960-109	0.5/1 hpGear Pump Repair Kit	1
*E	E05-3-9980-105	Safety Valve Block Repair Kit	1
*F	E05-3-9911-106	Valve Assy Repair Kit	1
*G	E05-3-9910-104	Valve Bolt Kit	1
-	PAR1703-MO	OIPM	

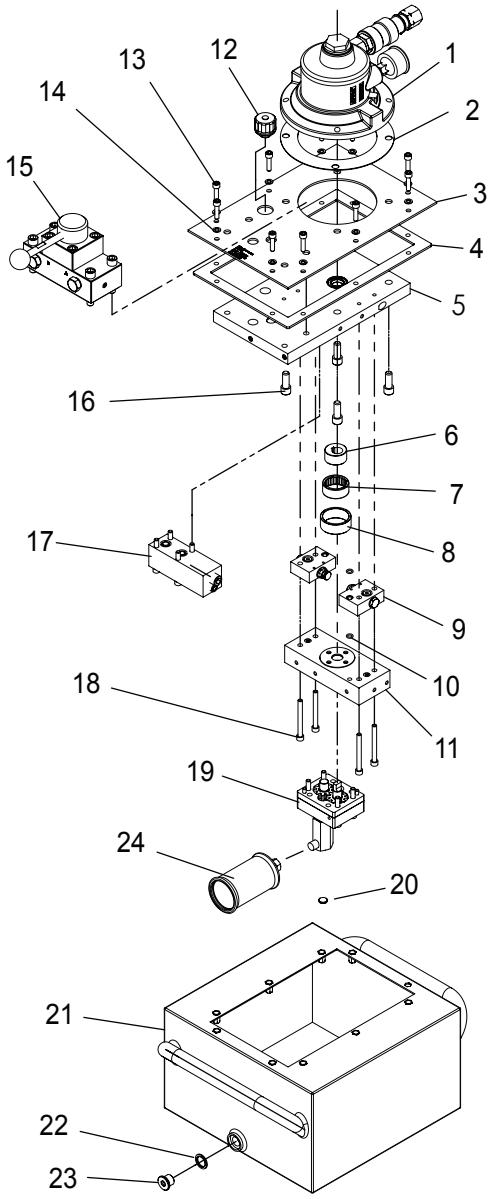

*Repair Kits- Repair Kits require special skill, training, and equipment to repair. Installation must be done by Authorized Service Center. Contact BVA for list of Authorized Service Centers.

Air Hydraulic Pump Service Parts

MODEL: PARD1701

SFA Companies 10939 N. Pomona Ave. Kansas City, MO 64153
Tel: 888-332-6419 - Fax: 816-891-6599
E-mail: sales@bvahydraulics.com Website: www.bvahydraulics.com

Note: Not all components of the pump are replacement items, but are illustrated as a convenient reference of location and position in the assembly sequence.

Parts Illustration

Item	Part Number	Description	Qty
1	E19-4-9000-107	Air Motor	1
2	E05-6-9002-107	Gasket, Motor	1
3	E07-6-9003-103	Reservoir Cover	1
4	E05-6-9004-101	Gasket, Reservoir	1
5	E07-4-3000-105	Upper Valve Body Assy	1
6	E05-6-9006-105	Eccentric Shaft, 5/8"	1
7	622-6-0318-203	Needle Bearing	1
8	E05-6-9007-107	Eccentric Bearing Sleeve	1
9	E05-4-4000-106	Piston Block Assy	2
10	511-7-0064-109	O-ring	2
11	E05-4-5000-101	Lower Valve Body Assy	1
12	E05-4-2000-106	Oil Filler Vent	1
13	649-1-0060-407	Bolt	10
14	601-3-0064-106	Gasket	10
15	D09-0-1004-104	Dump Valve Assy	1
16	649-1-0095-204	Socket Head Cap Screw	4
17	E07-4-8100-104	Safety Valve Block Assy	1
18	649-1-0063-403	Socket Head Cap Screw	4
19	E05-4-6000-106	Gear Pump Assy	1
20	H23-6-1000-102	Reservoir Magnet	1
21	E05-3-9005-105	Reservoir	1
22	532-3-0160-104	Drain Plug Washer	1
23	E05-6-8008-104	Drain Plug	1
24	E05-3-7000-105	Handle Weldment	1
25	E07-4-8000-100	Dump Valve Base Assy	1
*A	E05-3-9940-102	Piston Block Assy Repair Kit	1
*B	E05-3-9902-105	Reservoir Bolt Kit	1
*C	D09-3-9901-102	Valve Assy Repair Kit	1
*D	E05-3-9980-105	Safety Valve Block Repair Kit	1
*E	E05-3-9960-109	0.5/1 hp Gear Pump Repair Kit	1
*F	E05-3-9901-103	Hex Plug Kit	1
*G	E07-3-9901-107	Valve Base Repair Kit	1
-	PAR1703-MO	OIPM	1

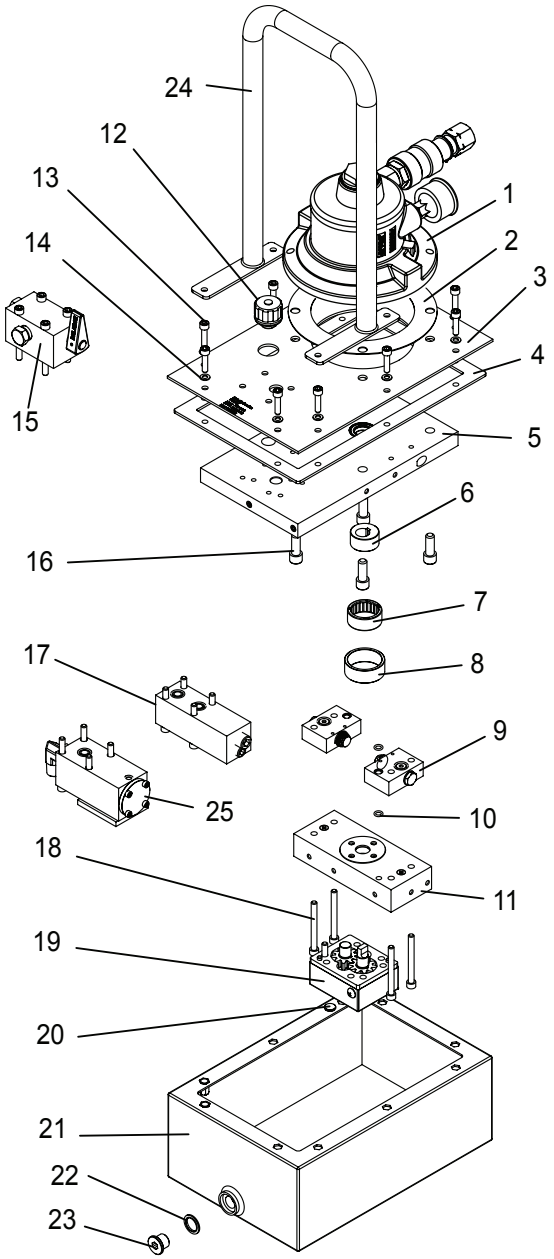

*Repair Kits- Repair Kits require special skill, training, and equipment to repair. Installation must be done by Authorized Service Center. Contact BVA for list of Authorized Service Centers.

LIFETIME LIMITED WARRANTY

BVA Hydraulics®, represented in the United States by SFA Companies [“SFA”] warrants this product to be free from defects in material and workmanship for the life of the product as long as the original purchaser owns the product. The warranty is non-transferable and is subject to the terms, exclusions, and limitations described below:

- Damaged components, including but not limited to bent rams, dented or crushed cylinder walls, broken welds or couplers as well as worn out seals, o-rings and springs are the result of misuse and not covered by warranty and BVA Hydraulics will not provide any warranty credit for such damaged components.
- This warranty does not cover ordinary wear and tear, overloading, alterations (including repairs or attempted repairs not performed by BVA Hydraulics or one of its authorized personnel), improper fluid use, or use of the product in any manner for which the product was not intended or the use of which is not in accordance with the instructions or warnings provided with the product.
- In the unlikely event that a BVA Hydraulics product fails due to material defect in workmanship, you may contact SFA for disposition. In such cases, the customer’s sole and exclusive remedy for any breach or alleged breach of warranty is limited to the repair or replacement of the defective product.
- Under no circumstances is BVA Hydraulics liable for any consequential or incidental damage or loss whatsoever.
- THIS WARRANTY IS LIMITED TO NEW PRODUCTS SOLD THROUGH AUTHORIZED DISTRIBUTORS AND OTHER CHANNELS DESIGNATED BY BVA HYDRAULICS. NO AGENT, EMPLOYEE OR OTHER REPRESENTATIVE OF BVA HYDRAULICS IS AUTHORIZED TO MODIFY THIS WARRANTY.
- THE FOREGOING IS EXCLUSIVE AND IS IN LIEU OF ALL OTHER EXPRESS AND IMPLIED WARRANTIES, INCLUDING BUT NOT LIMITED TO THE IMPLIED WARRANTIES OF MERCHANTABILITY AND FOR A FITNESS FOR A PARTICULAR PURPOSE.
- Components not manufactured by BVA Hydraulics including certain motor systems, gasoline engines, and others are not covered by this warranty and instead are covered by the manufacturer’s separate manufacturer’s warranty provided in the package.
- BVA Hydraulics’ liability in all cases is limited to, and will not exceed the purchase price paid for the product.

SFA Companies
10939 N. Pomona Ave. Kansas City, MO 64153
Tel: 888-332-6419
E-mail: sales@bvahydraulics.com

Notes

SFA Companies 10939 N. Pomona Ave. Kansas City, MO 64153
Tel: 888-332-6419 - Fax: 816-891-6599
E-mail: sales@bvahydraulics.com Website: www.bvahydraulics.com

Notes

SFA Companies 10939 N. Pomona Ave. Kansas City, MO 64153
Tel: 888-332-6419 - Fax: 816-891-6599
E-mail: sales@bvahydraulics.com Website: www.bvahydraulics.com